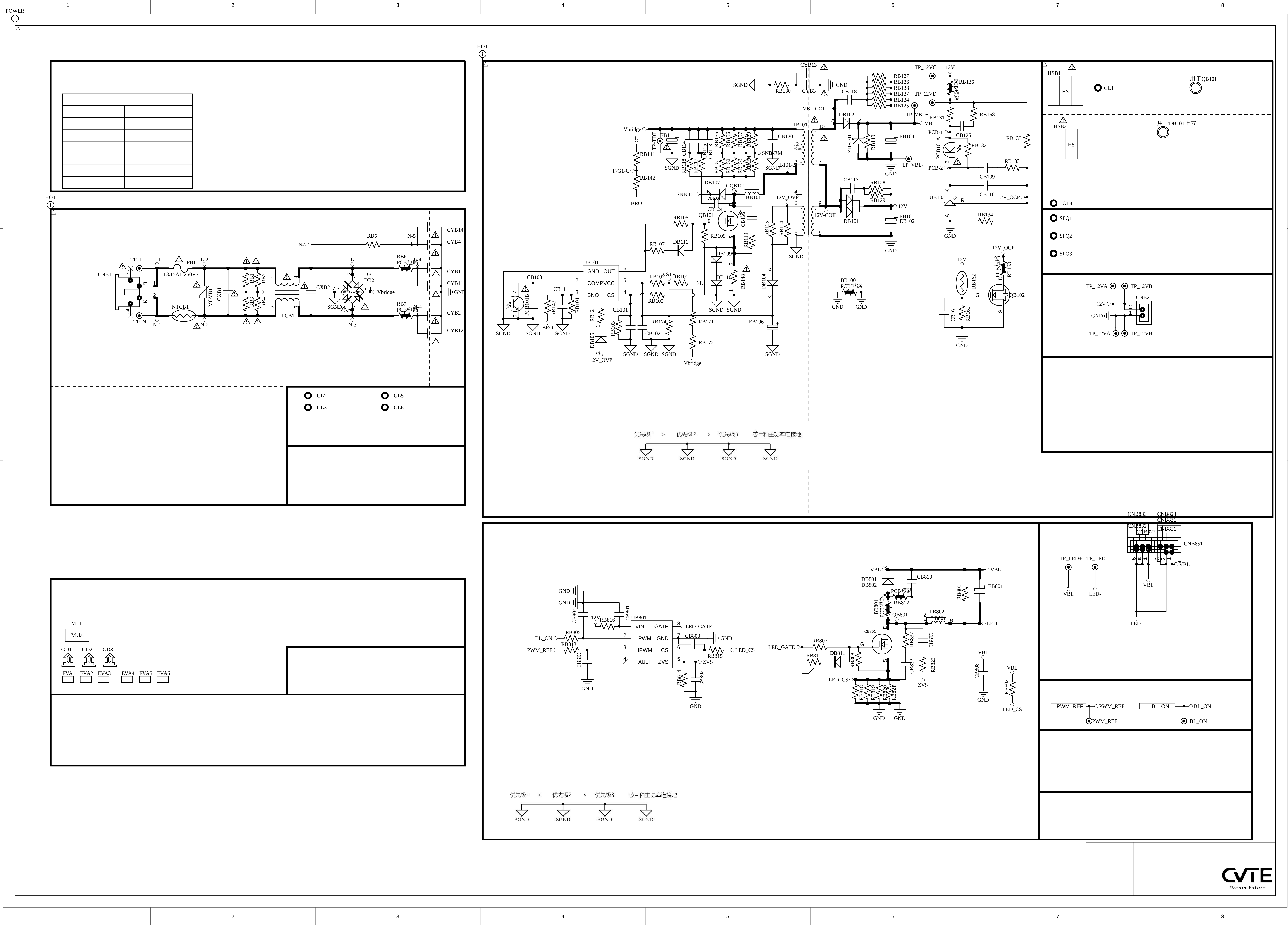
POWER
HOT
CNB1
TP_L
TP_N
L-1
N-1
L-2
N-2
FB1
T3.15AL 250V~
NTCB1
MOVB1
CXB1
CXB2
LCB1
DB1
DB2
Vbridge
SGND
CYB14
CYB4
CYB1
CYB11
CYB2
CYB12
RB5
RB6
RB7
PCB短路
GL2
GL3
GL5
GL6
ML1
Mylar
GD1
GD2
GD3
EVA1
EVA2
EVA3
EVA4
EVA5
EVA6
UB101
GND
OUT
COMP
VCC
BNO
CS
QB101
TB101
DB101
DB102
ZDB101
UB102
QB102
BB100
BB101
12V_OVP
12V_OCP
12V-COIL
VBL-COIL
SNB-RM
SNB-D-
F-G1-C
BRO
TP_12VC
TP_12VD
TP_VBL+
TP_VBL-
VBL
12V
HSB1
HSB2
HS
用于QB101
用于DB101上方
GL1
GL4
SFQ1
SFQ2
SFQ3
TP_12VA+
TP_12VB+
TP_12VA-
TP_12VB-
CNB2
优先级1 > 优先级2 > 优先级3 芯片和主功率连接地
UB801
VIN
GATE
LPWM
HPWM
FAULT
ZVS
BL_ON
PWM_REF
LED_GATE
LED_CS
QB801
LB801
LB802
DB801
DB802
EB801
CB810
LED-
TP_LED+
TP_LED-
CNB851
CNB833
CNB823
CNB831
CNB832
CNB822
CNB821
PWM_REF
BL_ON
CVTE
Dream-Future

PCB_NAME TPD.NT72690.PB767（T）

PCB_NAME EL.NT72690-FG75

PCB_TIME A23158

用于U1上

导热硅脂,0.05g,其它,白色,NULL

C100D C102D

C101D C103D

片式陶瓷电容,MC,16V,10uF,±20%,X5R,0805,SMD,TP
片式陶瓷电容,MC,16V,10uF,±20%,X5R,0805,SMD,TP
片式陶瓷电容,MC,16V,10uF,±20%,X5R,0805,SMD,TP
片式陶瓷电容,MC,16V,10uF,±20%,X5R,0805,SMD,TP

HS1

1 Heat1
2 Heat2
3 Heat3
4 Heat4

HS2

1 Heat1
2 Heat2
3 Heat3
4 Heat4

NC/散热片,AL6063-T5,黑色,54×55×2.3mm,纳米碳,6W,DIP PIN,4PIN,WT
散热片,AL6063-T5,黑色,55×54×10mm,[纳米电泳亮面],4.5W,DIP PIN,WT

NC/片式陶瓷电容,MC,50V,1000pF,±10%,X7R,0402,SMD,TP
NC/厚膜电阻,1/10W,0ohm,±5%,0603,SMD
NC/片式陶瓷电容,MC,50V,1000pF,±10%,X7R,0402,SMD,TP
NC/厚膜电阻,1/10W,0ohm,±5%,0603,SMD

NC/片式陶瓷电容,MC,50V,1000pF,±10%,X7R,0402,SMD,TP
NC/厚膜电阻,1/10W,0ohm,±5%,0603,SMD
NC/片式陶瓷电容,MC,50V,1000pF,±10%,X7R,0402,SMD,TP
NC/厚膜电阻,1/10W,0ohm,±5%,0603,SMD

C4 Heat4 R3 GND

C8 Heat2 R7 GND

C9 Heat1 R8 GND

C10 Heat3 R9 GND

DBS8

DOLBY Double-D

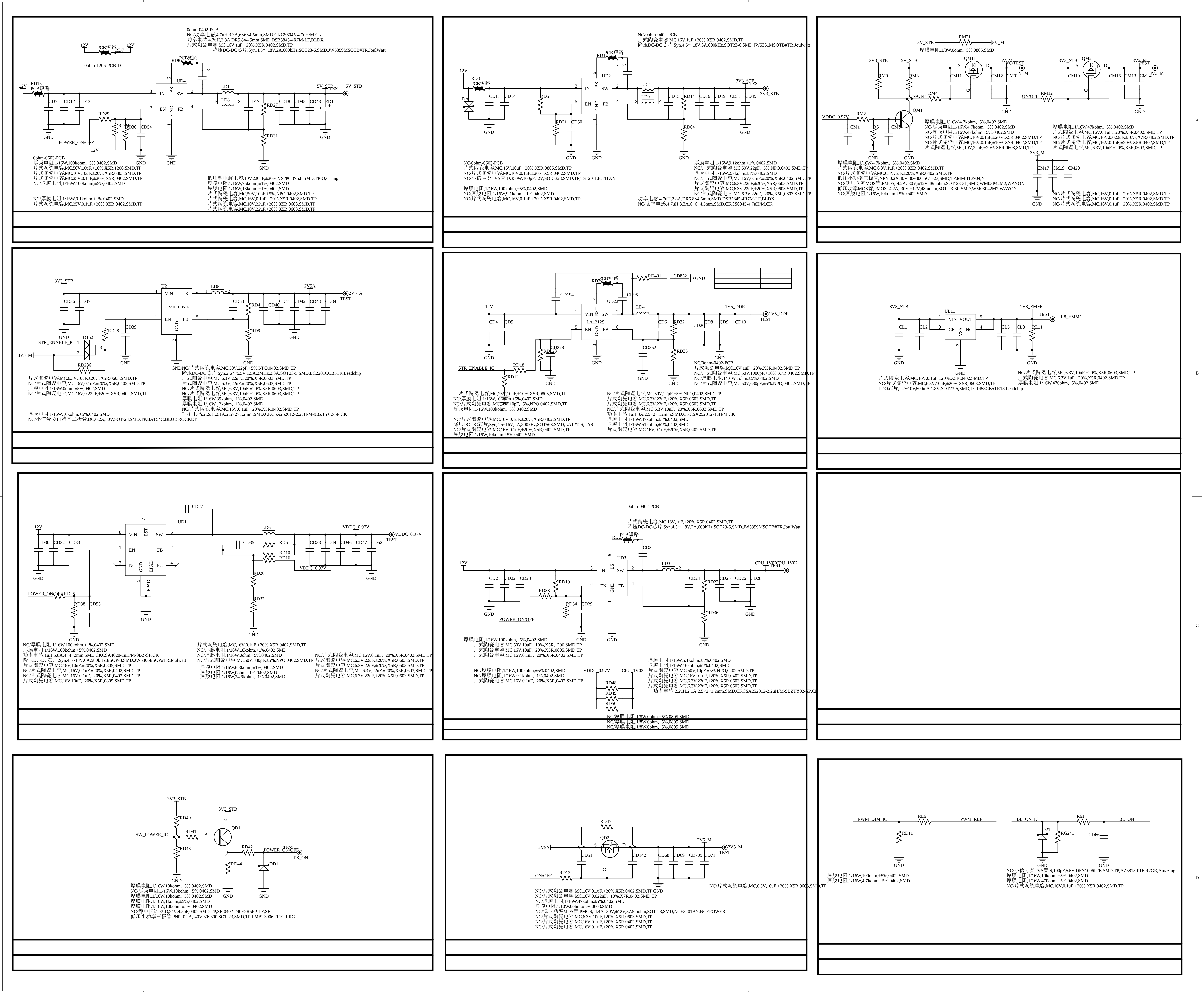
0ohm-0402-PCB
NC/功率电感,4.7uH,3.3A,6×6×4.5mm,SMD,CKCS6045-4.7uH/M,CK
功率电感,4.7uH,2.8A,DR5.8×4.5mm,SMD,DSB5845-4R7M-LF,BLDX
片式陶瓷电容,MC,16V,1uF,±20%,X5R,0402,SMD,TP
降压DC-DC芯片,Syn,4.5～18V,2A,600kHz,SOT23-6,SMD,JW5359MSOTB#TR,JoulWatt
0ohm-1206-PCB-D
5V_STB
POWER_ON/OFF
GND
0ohm-0603-PCB
厚膜电阻,1/16W,100kohm,±5%,0402,SMD
片式陶瓷电容,MC,50V,10uF,±10%,X5R,1206,SMD,TP
NC/片式陶瓷电容,MC,16V,10uF,±20%,X5R,0805,SMD,TP
片式陶瓷电容,MC,25V,0.1uF,±20%,X5R,0402,SMD,TP
NC/厚膜电阻,1/16W,100kohm,±5%,0402,SMD
NC/厚膜电阻,1/16W,9.1kohm,±1%,0402,SMD
片式陶瓷电容,MC,25V,0.1uF,±20%,X5R,0402,SMD,TP
低压铝电解电容,10V,220uF,±20%,VS,Φ6.3×5.8,SMD,TP-O,Chang
厚膜电阻,1/16W,75kohm,±1%,0402,SMD
厚膜电阻,1/16W,13kohm,±1%,0402,SMD
片式陶瓷电容,MC,50V,10pF,±5%,NPO,0402,SMD,TP
NC/片式陶瓷电容,MC,16V,0.1uF,±20%,X5R,0402,SMD,TP
NC/片式陶瓷电容,MC,10V,22uF,±20%,X5R,0603,SMD,TP
片式陶瓷电容,MC,10V,22uF,±20%,X5R,0603,SMD,TP
NC/0ohm-0402-PCB
片式陶瓷电容,MC,16V,1uF,±20%,X5R,0402,SMD,TP
降压DC-DC芯片,Syn,4.5～18V,3A,600kHz,SOT23-6,SMD,JW5361MSOTB#TR,JoulWatt
3V3_STB
NC/0ohm-0603-PCB
片式陶瓷电容,MC,16V,10uF,±20%,X5R,0805,SMD,TP
NC/片式陶瓷电容,MC,16V,0.1uF,±20%,X5R,0402,SMD,TP
NC/小信号类TVS管,D,350W,100pF,12V,SOD-323,SMD,TP,TS1201LE,TITAN
厚膜电阻,1/16W,100kohm,±5%,0402,SMD
NC/厚膜电阻,1/16W,9.1kohm,±1%,0402,SMD
NC/片式陶瓷电容,MC,16V,0.1uF,±20%,X5R,0402,SMD,TP
厚膜电阻,1/16W,9.1kohm,±1%,0402,SMD
NC/片式陶瓷电容,MC,50V,22pF,±5%,NPO,0402,SMD,TP
厚膜电阻,1/16W,2.7kohm,±1%,0402,SMD
NC/片式陶瓷电容,MC,16V,0.1uF,±20%,X5R,0402,SMD,TP
片式陶瓷电容,MC,6.3V,22uF,±20%,X5R,0603,SMD,TP
片式陶瓷电容,MC,6.3V,22uF,±20%,X5R,0603,SMD,TP
NC/片式陶瓷电容,MC,6.3V,22uF,±20%,X5R,0603,SMD,TP
功率电感,4.7uH,2.8A,DR5.8×4.5mm,SMD,DSB5845-4R7M-LF,BLDX
NC/功率电感,4.7uH,3.3A,6×6×4.5mm,SMD,CKCS6045-4.7uH/M,CK
5V_STB
5V_M
厚膜电阻,1/8W,0ohm,±5%,0805,SMD
3V3_STB
3V3_M
ON/OFF
VDDC_0.97V
厚膜电阻,1/16W,4.7kohm,±5%,0402,SMD
NC/厚膜电阻,1/16W,4.7kohm,±5%,0402,SMD
NC/厚膜电阻,1/16W,47kohm,±5%,0402,SMD
NC/片式陶瓷电容,MC,16V,0.1uF,±20%,X5R,0402,SMD,TP
NC/片式陶瓷电容,MC,16V,0.1uF,±10%,X7R,0402,SMD,TP
片式陶瓷电容,MC,10V,22uF,±20%,X5R,0603,SMD,TP
厚膜电阻,1/16W,47kohm,±5%,0402,SMD
片式陶瓷电容,MC,16V,0.1uF,±20%,X5R,0402,SMD,TP
NC/片式陶瓷电容,MC,16V,0.022uF,±10%,X7R,0402,SMD,TP
NC/片式陶瓷电容,MC,16V,0.1uF,±20%,X5R,0402,SMD,TP
片式陶瓷电容,MC,6.3V,10uF,±20%,X5R,0603,SMD,TP
厚膜电阻,1/16W,4.7kohm,±5%,0402,SMD
片式陶瓷电容,MC,6.3V,1uF,±20%,X5R,0402,SMD,TP
NC/片式陶瓷电容,MC,6.3V,1uF,±20%,X5R,0402,SMD,TP
低压小功率三极管,NPN,0.2A,40V,30~300,SOT-23,SMD,TP,MMBT3904,YJ
NC/低压功率MOS管,PMOS,-4.2A,-30V,±12V,48mohm,SOT-23-3L,SMD,WM03P42M2,WAYON
低压功率MOS管,PMOS,-4.2A,-30V,±12V,48mohm,SOT-23-3L,SMD,WM03P42M2,WAYON
NC/厚膜电阻,1/16W,10kohm,±5%,0402,SMD
NC/片式陶瓷电容,MC,16V,0.1uF,±20%,X5R,0402,SMD,TP
3V3_STB
2V5_A
STR_ENABLE_IC
3V3_M
LC2201CCB5TR
片式陶瓷电容,MC,6.3V,10uF,±20%,X5R,0603,SMD,TP
NC/片式陶瓷电容,MC,16V,0.1uF,±20%,X5R,0402,SMD,TP
厚膜电阻,1/16W,0ohm,±5%,0402,SMD
NC/片式陶瓷电容,MC,16V,0.22uF,±20%,X5R,0402,SMD,TP
厚膜电阻,1/16W,10kohm,±5%,0402,SMD
NC/小信号类肖特基二极管,DC,0.2A,30V,SOT-23,SMD,TP,BAT54C,BLUE ROCKET
NC/片式陶瓷电容,MC,50V,22pF,±5%,NPO,0402,SMD,TP
降压DC-DC芯片,Syn,2.6～5.5V,1.5A,2MHz,2.3A,SOT23-5,SMD,LC2201CCB5TR,Leadchip
片式陶瓷电容,MC,6.3V,22uF,±20%,X5R,0603,SMD,TP
厚膜电阻,1/16W,39kohm,±1%,0402,SMD
厚膜电阻,1/16W,12kohm,±1%,0402,SMD
功率电感,2.2uH,2.1A,2.5×2×1.2mm,SMD,CKCSA252012-2.2uH/M-9BZTY02-SP,CK
1V5_DDR
LA1212S
片式陶瓷电容,MC,25V,10uF,±10%,X5R,0805,SMD,TP
厚膜电阻,1/16W,100kohm,±5%,0402,SMD
降压DC-DC芯片,Syn,4.5~16V,2A,800kHz,SOT563,SMD,LA1212S,LAS
NC/片式陶瓷电容,MC,50V,1000pF,±10%,X7R,0402,SMD,TP
功率电感,1uH,3A,2.5×2×1.2mm,SMD,CKCSA252012-1uH/M,CK
厚膜电阻,1/16W,47kohm,±1%,0402,SMD
厚膜电阻,1/16W,51kohm,±1%,0402,SMD
3V3_STB
1V8_EMMC
1.8_EMMC
UL11
LDO芯片,2.7~10V,500mA,1.8V,SOT23-5,SMD,LC1458CB5TR18,Leadchip
厚膜电阻,1/16W,470ohm,±5%,0402,SMD
VDDC_0.97V
POWER_ON/OFF
功率电感,5.8A,4×4×2mm,SMD,CKCSA4020-1uH/M-9BZ-SP,CK
降压DC-DC芯片,Syn,4.5~18V,6A,580kHz,ESOP-8,SMD,JW5306ESOP#TR,Joulwatt
厚膜电阻,1/16W,18kohm,±1%,0402,SMD
厚膜电阻,1/16W,6.8kohm,±1%,0402,SMD
厚膜电阻,1/16W,24.9kohm,±1%,0402,SMD
0ohm-0402-PCB
降压DC-DC芯片,Syn,4.5～18V,2A,600kHz,SOT23-6,SMD,JW5359MSOTB#TR,JoulWatt
CPU_1V02
厚膜电阻,1/16W,5.1kohm,±1%,0402,SMD
厚膜电阻,1/16W,16kohm,±1%,0402,SMD
功率电感,2.2uH,2.1A,2.5×2×1.2mm,SMD,CKCSA252012-2.2uH/M-9BZTY02-SP,CK
NC/厚膜电阻,1/8W,0ohm,±5%,0805,SMD
SW_POWER_IC
PS_ON
NC/静电抑制器,D,24V,4.5pF,0402,SMD,TP,SFI0402-240E2R5PP-LF,SFI
低压小功率三极管,PNP,-0.2A,-40V,30~300,SOT-23,SMD,TP,LMBT3906LT1G,LRC
2V5A
2V5_M
NC/低压功率MOS管,PMOS,-4.4A,-30V,±12V,37.5mohm,SOT-23,SMD,NCE3401BY,NCEPOWER
PWM_DIM_IC
PWM_REF
BL_ON_IC
BL_ON
NC/小信号类TVS管,S,100pF,5.5V,DFN1006P2E,SMD,TP,AZ5815-01F.R7GR,Amazing

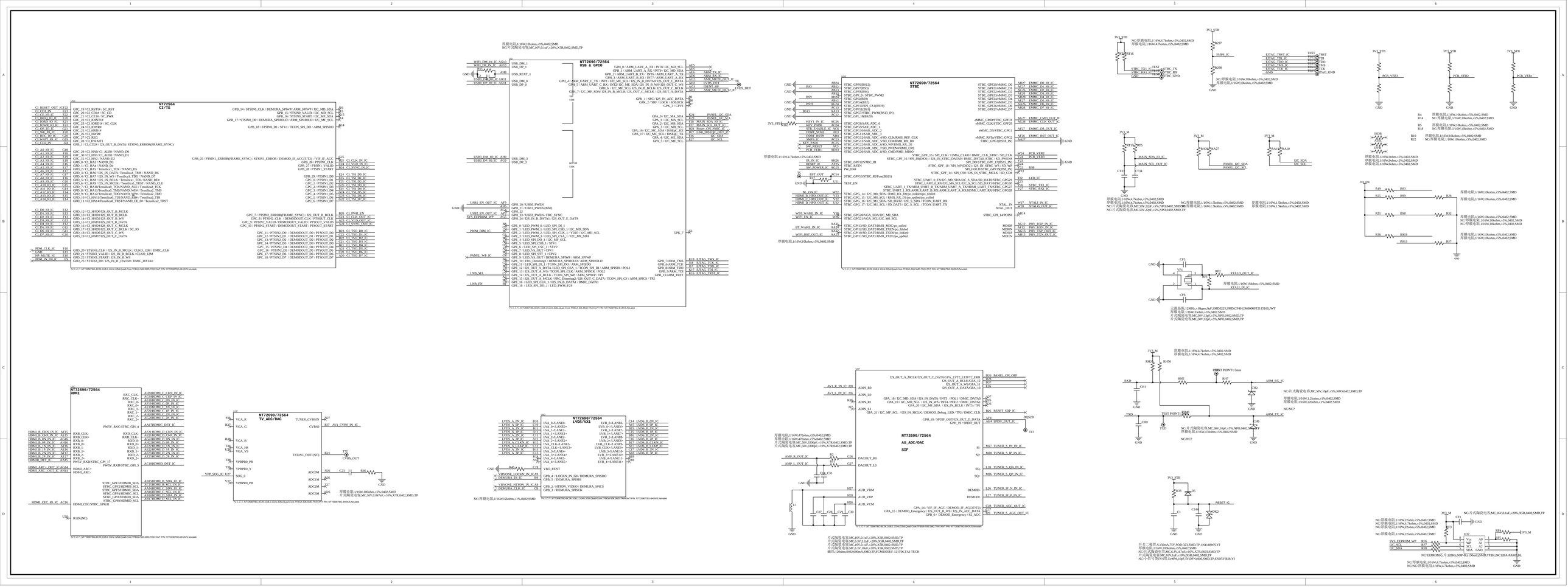
NT72564
CI/TS
NT72690/72564
USB & GPIO
NT72690/72564
STBC
NT72690/72564
AU_ADC/DAC
SIF
NT72690/72564
HDMI
NT72690/72564
TV_ADC/DAC
NT72690/72564
LVDS/VX1
3V3_STB
GND

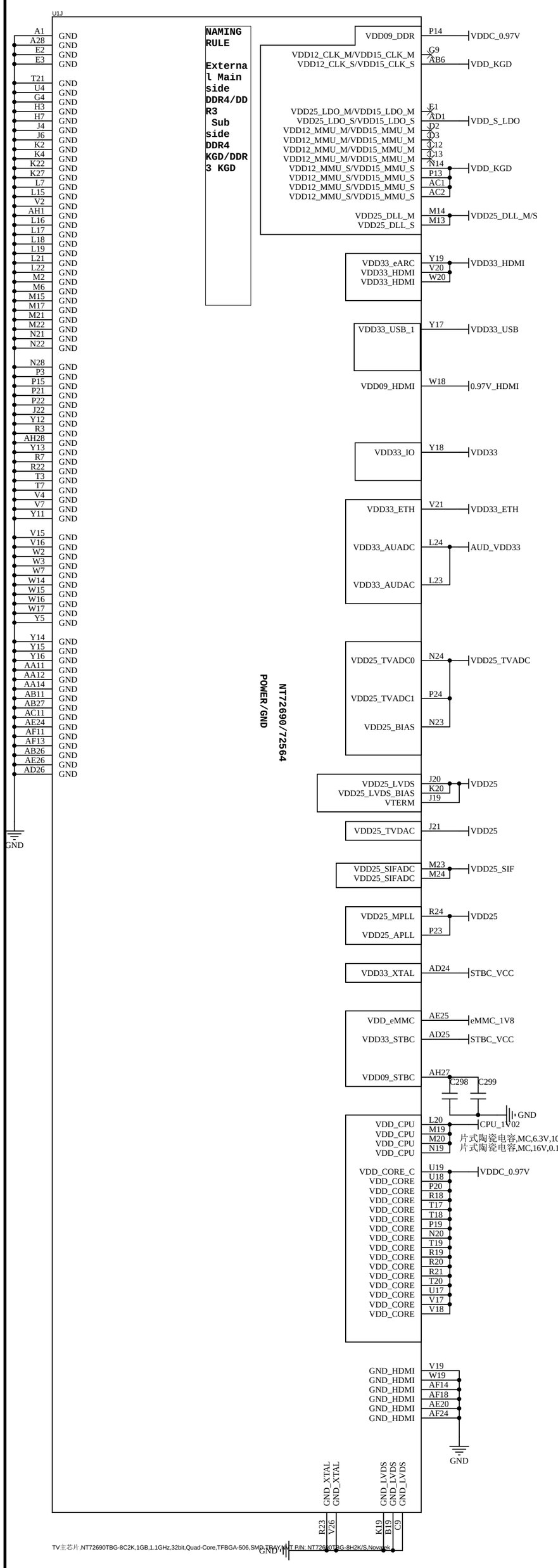

VDDC_0.97V
C265 C266 C267 C268 C269 C250 C251 C252 C253 C254
GND
NC/片式陶瓷电容,MC,16V,0.1uF,±20%,X5R,0402,SMD,TP
片式陶瓷电容,MC,16V,0.1uF,±20%,X5R,0402,SMD,TP
NC/片式陶瓷电容,MC,6.3V,4.7uF,±20%,X5R,0402,SMD,TP
NC/片式陶瓷电容,MC,6.3V,22uF,±20%,X5R,0603,SMD,TP
NC/片式陶瓷电容,MC,6.3V,22uF,±20%,X5R,0603,SMD,TP

片式陶瓷电容,MC,16V,0.1uF,±20%,X5R,0402,SMD,TP
片式陶瓷电容,MC,6.3V,4.7uF,±20%,X5R,0402,SMD,TP
片式陶瓷电容,MC,6.3V,10uF,±20%,X5R,0603,SMD,TP
NC/片式陶瓷电容,MC,6.3V,10uF,±20%,X5R,0603,SMD,TP
NC/片式陶瓷电容,MC,6.3V,10uF,±20%,X5R,0603,SMD,TP

VDDC_0.97V L41 0.97V_HDMI
C285 C284 C296
GND
磁珠,120ohm,0402,500mA,SMD,TP,GZ1005U121CTF,Sunlord
片式陶瓷电容,MC,16V,0.1uF,±20%,X5R,0402,SMD,TP
片式陶瓷电容,MC,6.3V,10uF,±20%,X5R,0603,SMD,TP
片式陶瓷电容,MC,6.3V,4.7uF,±20%,X5R,0402,SMD,TP

2V5_M L34 PCB短路 VDD25
C245 C246 C247 C244 C248
GND
NC/0ohm-0603-PCB
片式陶瓷电容,MC,6.3V,22uF,±20%,X5R,0603,SMD,TP
片式陶瓷电容,MC,16V,0.1uF,±20%,X5R,0402,SMD,TP
NC/片式陶瓷电容,MC,16V,0.1uF,±20%,X5R,0402,SMD,TP
NC/片式陶瓷电容,MC,16V,0.1uF,±20%,X5R,0402,SMD,TP
片式陶瓷电容,MC,6.3V,4.7uF,±20%,X5R,0402,SMD,TP

2V5_M L39 VDD25_SIF
C262 C263
GND
磁珠,120ohm,0402,600mA,SMD,TP,FCM1005KF-121T06,TAI-TECH
片式陶瓷电容,MC,16V,0.1uF,±20%,X5R,0402,SMD,TP
片式陶瓷电容,MC,6.3V,4.7uF,±20%,X5R,0402,SMD,TP

VDD_KGD L58 VDD_S_LDO
2V5_M L57
CM317 CM318
GND
厚膜电阻,1/16W,0ohm,±5%,0402,SMD
NC/厚膜电阻,1/16W,0ohm,±5%,0402,SMD
片式陶瓷电容,MC,6.3V,4.7uF,±20%,X5R,0402,SMD,TP
片式陶瓷电容,MC,16V,0.1uF,±20%,X5R,0402,SMD,TP

2V5_M L43 VDD25_TVADC
C286 C287
GND
磁珠,120ohm,0402,600mA,SMD,TP,FCM1005KF-121T06,TAI-TECH
片式陶瓷电容,MC,16V,0.1uF,±20%,X5R,0402,SMD,TP
片式陶瓷电容,MC,6.3V,10uF,±20%,X5R,0603,SMD,TP

2V5_M L44 VDD25_DLL_M/S
CM012 CM022 CM023
GND
片式陶瓷电容,MC,16V,0.1uF,±20%,X5R,0402,SMD,TP
NC/NC/片式陶瓷电容,MC,16V,0.1uF,±20%,X5R,0402,SMD,TP
片式陶瓷电容,MC,16V,0.1uF,±20%,X5R,0402,SMD,TP
磁珠,120ohm,0402,500mA,SMD,TP,GZ1005U121CTF,Sunlord

3V3_M L33 PCB短路 AUD_VDD33
C243 C242
GND
NC/0ohm-0402-PCB
片式陶瓷电容,MC,6.3V,10uF,±20%,X5R,0603,SMD,TP
片式陶瓷电容,MC,16V,0.1uF,±20%,X5R,0402,SMD,TP

3V3_M L38 PCB短路 VDD33
C259 C258
GND
NC/0ohm-0402-PCB
片式陶瓷电容,MC,6.3V,10uF,±20%,X5R,0603,SMD,TP
片式陶瓷电容,MC,16V,0.1uF,±20%,X5R,0402,SMD,TP

3V3_STB L52
3V3_M L45 VDD33_HDMI
C279 C278
GND
片式陶瓷电容,MC,6.3V,10uF,±20%,X5R,0603,SMD,TP
NC/厚膜电阻,1/16W,0ohm,±5%,0402,SMD
厚膜电阻,1/16W,0ohm,±5%,0402,SMD
片式陶瓷电容,MC,16V,0.1uF,±20%,X5R,0402,SMD,TP

3V3_STB L40 VDD33_ETH
3V3_M L406
C271 C270
GND
厚膜电阻,1/16W,0ohm,±5%,0402,SMD
片式陶瓷电容,MC,6.3V,10uF,±20%,X5R,0603,SMD,TP
片式陶瓷电容,MC,16V,0.1uF,±20%,X5R,0402,SMD,TP
NC/厚膜电阻,1/16W,0ohm,±5%,0402,SMD

3V3_STB L36 PCB短路 STBC_VCC
C257 C256 C255
GND
NC/0ohm-0402-PCB
片式陶瓷电容,MC,16V,0.1uF,±20%,X5R,0402,SMD,TP
片式陶瓷电容,MC,16V,0.1uF,±20%,X5R,0402,SMD,TP
片式陶瓷电容,MC,6.3V,10uF,±20%,X5R,0603,SMD,TP

3V3_STB QM6 S D VDD33_USB
C48 G
SW_POWER_IC R53
C275 C276 C277
GND
NC/片式陶瓷电容,MC,6.3V,10uF,±20%,X5R,0603,SMD,TP
片式陶瓷电容,MC,16V,0.1uF,±20%,X5R,0402,SMD,TP
片式陶瓷电容,MC,6.3V,22uF,±20%,X5R,0603,SMD,TP
片式陶瓷电容,MC,16V,0.22uF,±20%,X5R,0402,SMD,TP
厚膜电阻,1/16W,47kohm,±5%,0402,SMD
低压功率MOS管,PMOS,-4.2A,-30V,±12V,52mohm,SOT-23,SMD,BRCS3401MC,BLUE ROCKET

1V8_EMMC L56 PCB短路 eMMC_1V8
C292 C291
GND
NC/0ohm-0402-PCB
片式陶瓷电容,MC,16V,0.1uF,±20%,X5R,0402,SMD,TP
片式陶瓷电容,MC,6.3V,22uF,±20%,X5R,0603,SMD,TP

CPU_1V02
CM3 CM4 CM5 CM6 CD58
GND
片式陶瓷电容,MC,6.3V,4.7uF,±20%,X5R,0402,SMD,TP
片式陶瓷电容,MC,6.3V,10uF,±20%,X5R,0603,SMD,TP
NC/片式陶瓷电容,MC,16V,0.1uF,±20%,X5R,0402,SMD,TP
NC/片式陶瓷电容,MC,16V,0.1uF,±20%,X5R,0402,SMD,TP
片式陶瓷电容,MC,16V,0.1uF,±20%,X5R,0402,SMD,TP

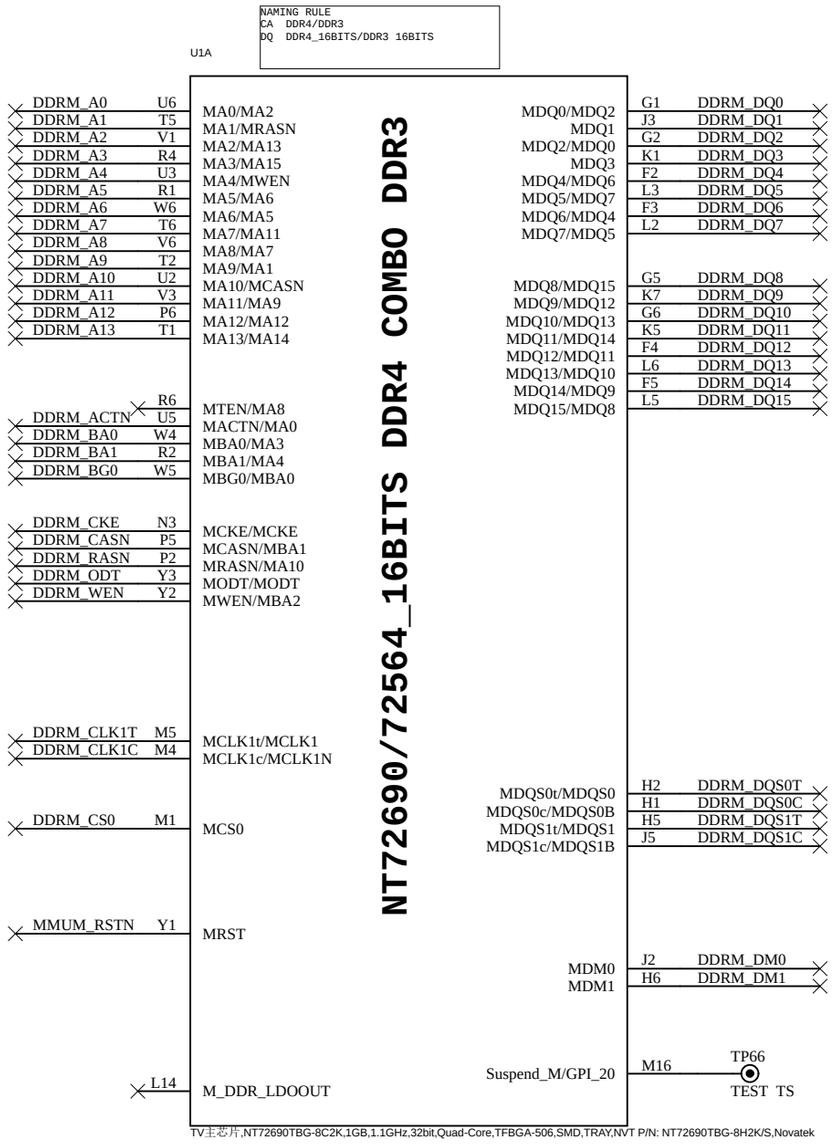

TV主芯片,NT72690TBG-8C2K,1GB,1.1GHz,32bit,Quad-Core,TFBGA-506,SMD,TRAY,NVT P/N: NT72690TBG-8H2K/S,Novatek

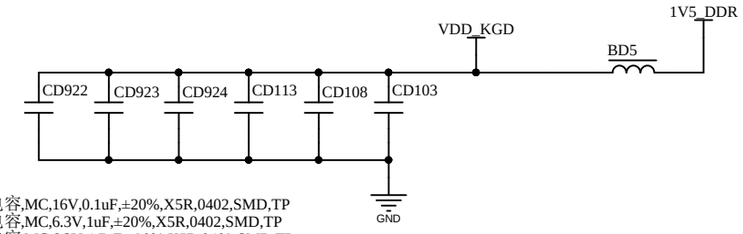

片式陶瓷电容,MC,16V,0.1uF,±20%,X5R,0402,SMD,TP
片式陶瓷电容,MC,6.3V,1uF,±20%,X5R,0402,SMD,TP
片式陶瓷电容,MC,6.3V,4.7uF,±20%,X5R,0402,SMD,TP
片式陶瓷电容,MC,16V,0.1uF,±20%,X5R,0402,SMD,TP
片式陶瓷电容,MC,6.3V,4.7uF,±20%,X5R,0402,SMD,TP
片式陶瓷电容,MC,6.3V,1uF,±20%,X5R,0402,SMD,TP

磁珠,120ohm,0603,3A,SMD,TP,HCB1608KF-121T30,TAI-TECH

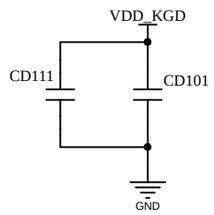

片式陶瓷电容,MC,16V,0.1uF,±20%,X5R,0402,SMD,TP
片式陶瓷电容,MC,6.3V,10uF,±20%,X5R,0603,SMD,TP

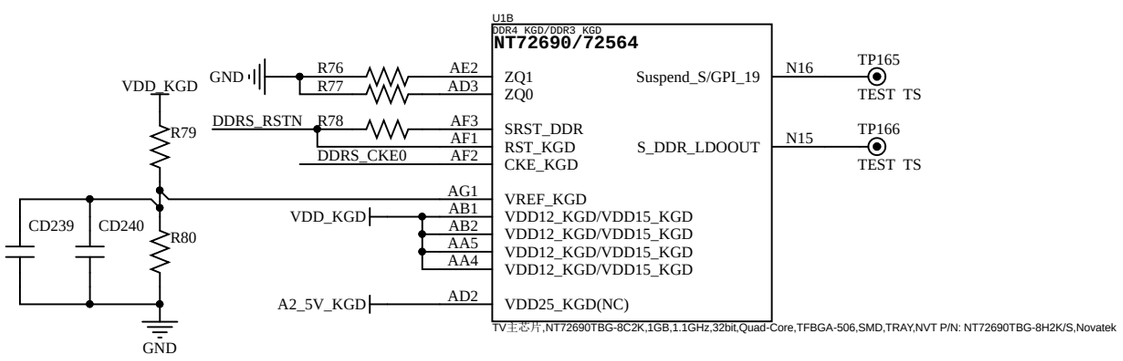

TV主芯片,NT72690TBG-8C2K,1GB,1.1GHz,32bit,Quad-Core,TFBGA-506,SMD,TRAY,NVT P/N: NT72690TBG-8H2K/S,Novatek

NC/厚膜电阻,1/16W,0ohm,±5%,0402,SMD
厚膜电阻,1/16W,1kohm,±1%,0402,SMD
厚膜电阻,1/16W,1kohm,±1%,0402,SMD
厚膜电阻,1/16W,240ohm,±1%,0402,SMD
厚膜电阻,1/16W,240ohm,±1%,0402,SMD
片式陶瓷电容,MC,16V,0.1uF,±20%,X5R,0402,SMD,TP
片式陶瓷电容,MC,50V,1000pF,±10%,X7R,0402,SMD,TP

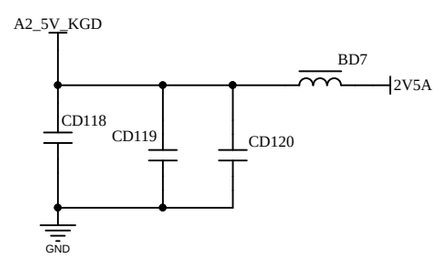

NC/磁珠,120ohm,0402,600mA,SMD,TP,FCM1005KF-121T06,Tai-tech
NC/片式陶瓷电容,MC,16V,0.1uF,±20%,X5R,0402,SMD,TP
NC/NC/片式陶瓷电容,MC,16V,0.1uF,±20%,X5R,0402,SMD,TP
NC/片式陶瓷电容,MC,6.3V,4.7uF,±20%,X5R,0402,SMD,TP

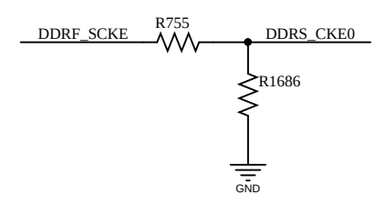

厚膜电阻,1/16W,1.2kohm,±1%,0402,SMD
厚膜电阻,1/16W,1kohm,±1%,0402,SMD

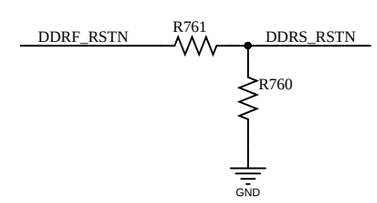

厚膜电阻,1/16W,12kohm,±1%,0402,SMD
厚膜电阻,1/16W,10kohm,±1%,0402,SMD

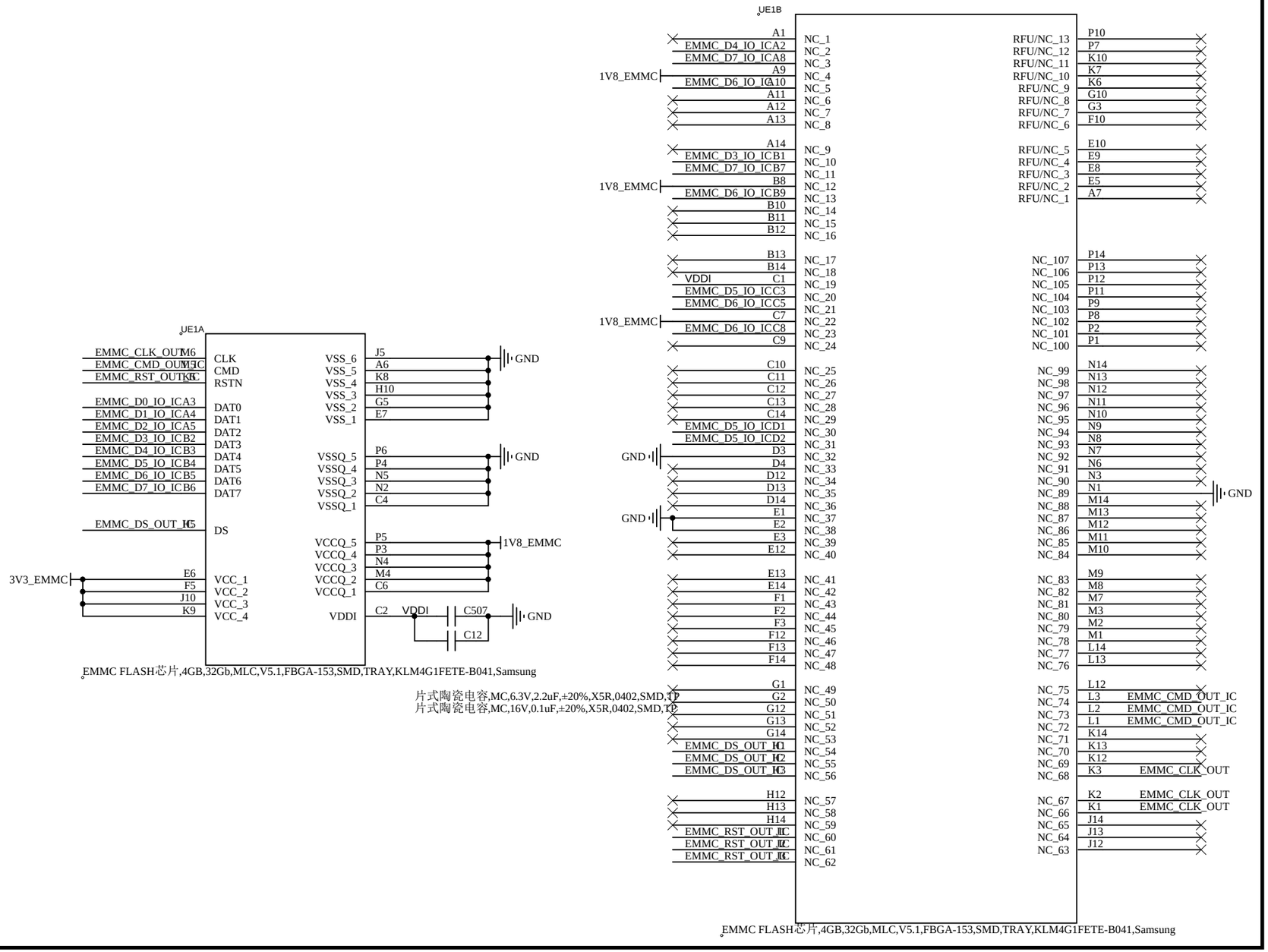
UE1A
EMMC_CLK_OUT M6
EMMC_CMD_OUT M3
EMMC_RST_OUT K6
EMMC_D0_IO_ICA3
EMMC_D1_IO_ICA4
EMMC_D2_IO_ICA5
EMMC_D3_IO_ICB2
EMMC_D4_IO_ICB3
EMMC_D5_IO_ICB4
EMMC_D6_IO_ICB5
EMMC_D7_IO_ICB6
EMMC_DS_OUT_IC H5
3V3_EMMC
E6
F5
J10
K9
CLK
CMD
RSTN
DAT0
DAT1
DAT2
DAT3
DAT4
DAT5
DAT6
DAT7
DS
VCC_1
VCC_2
VCC_3
VCC_4
VSS_6 J5
VSS_5 A6
VSS_4 K8
VSS_3 H10
VSS_2 G5
VSS_1 E7
GND
VSSQ_5 P6
VSSQ_4 P4
VSSQ_3 N5
VSSQ_2 N2
VSSQ_1 C4
GND
VCCQ_5 P5
VCCQ_4 P3
VCCQ_3 N4
VCCQ_2 M4
VCCQ_1 C6
1V8_EMMC
VDDI C2
VDDI
C507
C12
GND
EMMC FLASH芯片,4GB,32Gb,MLC,V5.1,FBGA-153,SMD,TRAY,KLM4G1FETE-B041,Samsung
片式陶瓷电容,MC,6.3V,2.2uF,±20%,X5R,0402,SMD,TP
片式陶瓷电容,MC,16V,0.1uF,±20%,X5R,0402,SMD,TP
UE1B
A1
EMMC_D4_IO_ICA2
EMMC_D7_IO_ICA8
1V8_EMMC
A9
EMMC_D6_IO_ICA10
A11
A12
A13
A14
EMMC_D3_IO_ICB1
EMMC_D7_IO_ICB7
1V8_EMMC
B8
EMMC_D6_IO_ICB9
B10
B11
B12
B13
B14
VDDI C1
EMMC_D5_IO_ICC3
EMMC_D6_IO_ICC5
1V8_EMMC
C7
EMMC_D6_IO_ICC8
C9
C10
C11
C12
C13
C14
EMMC_D5_IO_ICD1
EMMC_D5_IO_ICD2
GND
D3
D4
D12
D13
D14
GND
E1
E2
E3
E12
E13
E14
F1
F2
F3
F12
F13
F14
G1
G2
G12
G13
G14
EMMC_DS_OUT_IC H1
EMMC_DS_OUT_IC H2
EMMC_DS_OUT_IC H3
H12
H13
H14
EMMC_RST_OUT_IC K7
EMMC_RST_OUT_IC K5
EMMC_RST_OUT_IC K4
NC_1
NC_2
NC_3
NC_4
NC_5
NC_6
NC_7
NC_8
NC_9
NC_10
NC_11
NC_12
NC_13
NC_14
NC_15
NC_16
NC_17
NC_18
NC_19
NC_20
NC_21
NC_22
NC_23
NC_24
NC_25
NC_26
NC_27
NC_28
NC_29
NC_30
NC_31
NC_32
NC_33
NC_34
NC_35
NC_36
NC_37
NC_38
NC_39
NC_40
NC_41
NC_42
NC_43
NC_44
NC_45
NC_46
NC_47
NC_48
NC_49
NC_50
NC_51
NC_52
NC_53
NC_54
NC_55
NC_56
NC_57
NC_58
NC_59
NC_60
NC_61
NC_62
RFU/NC_13 P10
RFU/NC_12 P7
RFU/NC_11 K10
RFU/NC_10 K7
RFU/NC_9 K6
RFU/NC_8 G10
RFU/NC_7 G3
RFU/NC_6 F10
RFU/NC_5 E10
RFU/NC_4 E9
RFU/NC_3 E8
RFU/NC_2 E5
RFU/NC_1 A7
NC_107 P14
NC_106 P13
NC_105 P12
NC_104 P11
NC_103 P9
NC_102 P8
NC_101 P2
NC_100 P1
NC_99 N14
NC_98 N13
NC_97 N12
NC_96 N11
NC_95 N10
NC_94 N9
NC_93 N8
NC_92 N7
NC_91 N6
NC_90 N3
NC_89 N1
GND
NC_88 M14
NC_87 M13
NC_86 M12
NC_85 M11
NC_84 M10
NC_83 M9
NC_82 M8
NC_81 M7
NC_80 M3
NC_79 M2
NC_78 M1
NC_77 L14
NC_76 L13
NC_75 L12
NC_74 L3 EMMC_CMD_OUT_IC
NC_73 L2 EMMC_CMD_OUT_IC
NC_72 L1 EMMC_CMD_OUT_IC
NC_71 K14
NC_70 K13
NC_69 K12
NC_68 K3 EMMC_CLK_OUT
NC_67 K2 EMMC_CLK_OUT
NC_66 K1 EMMC_CLK_OUT
NC_65 J14
NC_64 J13
NC_63 J12
EMMC FLASH芯片,4GB,32Gb,MLC,V5.1,FBGA-153,SMD,TRAY,KLM4G1FETE-B041,Samsung

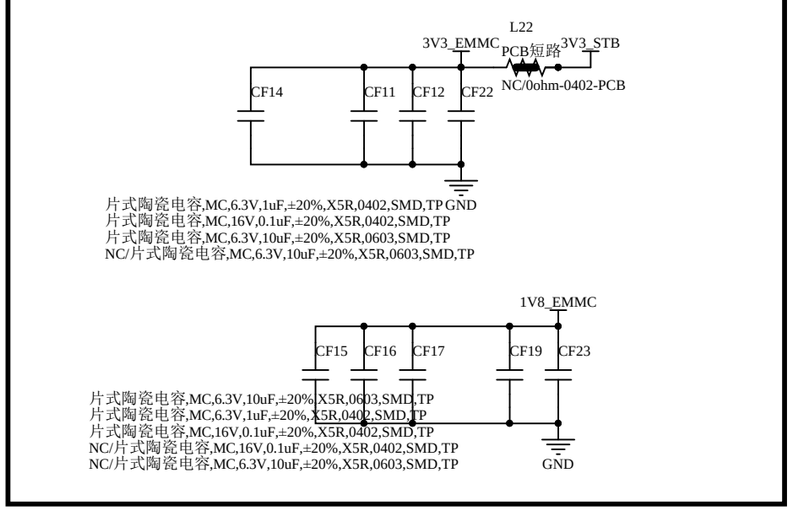
L22
3V3_EMMC
PCB短路
3V3_STB
NC/0ohm-0402-PCB
CF14
CF11
CF12
CF22
GND
片式陶瓷电容,MC,6.3V,1uF,±20%,X5R,0402,SMD,TP
片式陶瓷电容,MC,16V,0.1uF,±20%,X5R,0402,SMD,TP
片式陶瓷电容,MC,6.3V,10uF,±20%,X5R,0603,SMD,TP
NC/片式陶瓷电容,MC,6.3V,10uF,±20%,X5R,0603,SMD,TP
1V8_EMMC
CF15
CF16
CF17
CF19
CF23
片式陶瓷电容,MC,6.3V,10uF,±20%,X5R,0603,SMD,TP
片式陶瓷电容,MC,6.3V,1uF,±20%,X5R,0402,SMD,TP
片式陶瓷电容,MC,16V,0.1uF,±20%,X5R,0402,SMD,TP
NC/片式陶瓷电容,MC,16V,0.1uF,±20%,X5R,0402,SMD,TP
NC/片式陶瓷电容,MC,6.3V,10uF,±20%,X5R,0603,SMD,TP
GND

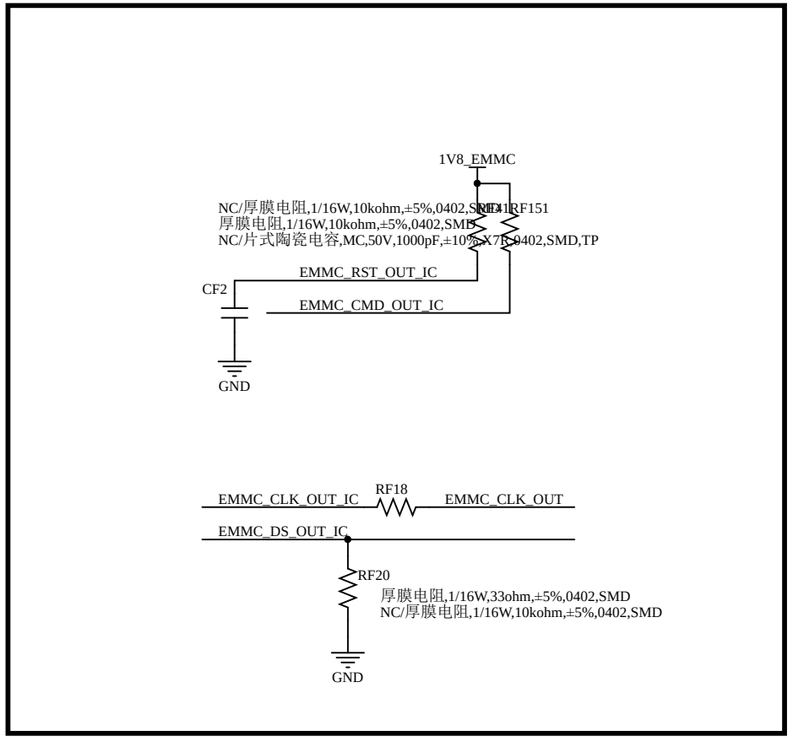
1V8_EMMC
NC/厚膜电阻,1/16W,10kohm,±5%,0402,SMD
RF151
厚膜电阻,1/16W,10kohm,±5%,0402,SMD
NC/片式陶瓷电容,MC,50V,1000pF,±10%,X7R,0402,SMD,TP
EMMC_RST_OUT_IC
CF2
EMMC_CMD_OUT_IC
GND
EMMC_CLK_OUT_IC
RF18
EMMC_CLK_OUT
EMMC_DS_OUT_IC
RF20
厚膜电阻,1/16W,33ohm,±5%,0402,SMD
NC/厚膜电阻,1/16W,10kohm,±5%,0402,SMD
GND

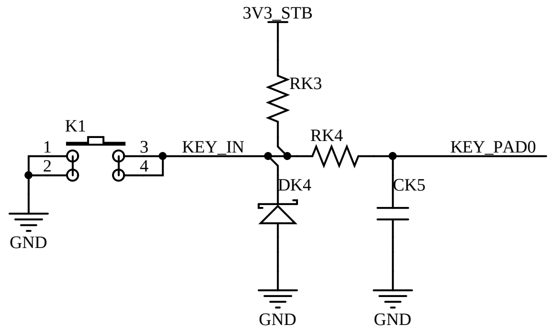

厚膜电阻,1/16W,4.7kohm,±5%,0402,SMD
NC/片式陶瓷电容,MC,50V,0.01uF,±10%,X7R,0402,SMD,TP
厚膜电阻,1/16W,1kohm,±5%,0402,SMD
轻触开关,6×6×7.5mm,V,4Pin,260gf,±30gf,DIP,KFC-A06-H7.5-EP-260G,CS
NC/小信号类TVS管,D,0.5pF,5.3V,0402,SMD,TP,AZ5325-01F.R7G,Amazing

单组份硅橡胶,Tube,SLD-8854W,单组份硅橡胶,白色,绝缘强度18kV/mm,sunyes

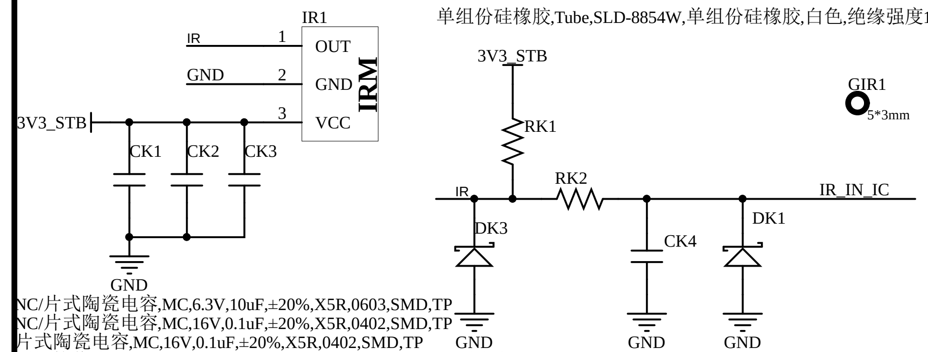

NC/片式陶瓷电容,MC,6.3V,10uF,±20%,X5R,0603,SMD,TP
NC/片式陶瓷电容,MC,16V,0.1uF,±20%,X5R,0402,SMD,TP
片式陶瓷电容,MC,16V,0.1uF,±20%,X5R,0402,SMD,TP
遥控接收头,2.7~5.5V,37.9KHz,6×5.2×5.45mm,DIP,BULK,GT2308V1.0
厚膜电阻,1/16W,4.7kohm,±5%,0402,SMD
厚膜电阻,1/16W,1kohm,±5%,0402,SMD
片式陶瓷电容,MC,50V,22pF,±5%,NPO,0402,SMD,TP
NC/小信号类TVS管,D,0.5pF,5.3V,0402,SMD,TP,AZ5325-01F.R7G,Amazing
NC/小信号类TVS管,D,0.5pF,5.3V,0402,SMD,TP,AZ5325-01F.R7G,Amazing

NC/厚膜电阻,1/16W,10kohm,±5%,0402,SMD

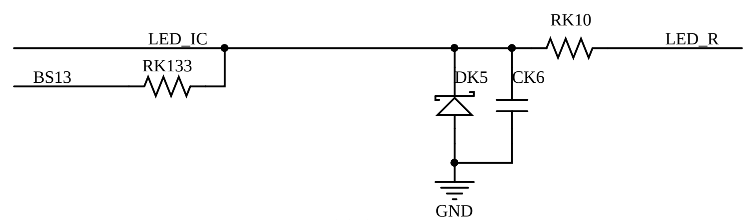

厚膜电阻,1/16W,470ohm,±5%,0402,SMD
NC/片式陶瓷电容,MC,16V,0.1uF,±20%,X5R,0402,SMD,TP
NC/小信号类TVS管,D,0.5pF,5.3V,0402,SMD,TP,AZ5325-01F.R7G,Amazing

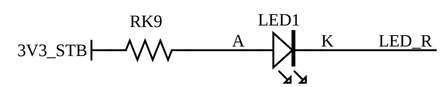

插件发光二极管,R,30mA,70~70mcd,SI,Φ3.86×5.3mm,DIP,BULK,WEJ3Z4RD-713-DZ,WEJ
厚膜电阻,1/16W,0ohm,±5%,0402,SMD
单组份硅橡胶,Tube,SLD-8854W,单组份硅橡胶,白色,绝缘强度18kV/mm,sunyes

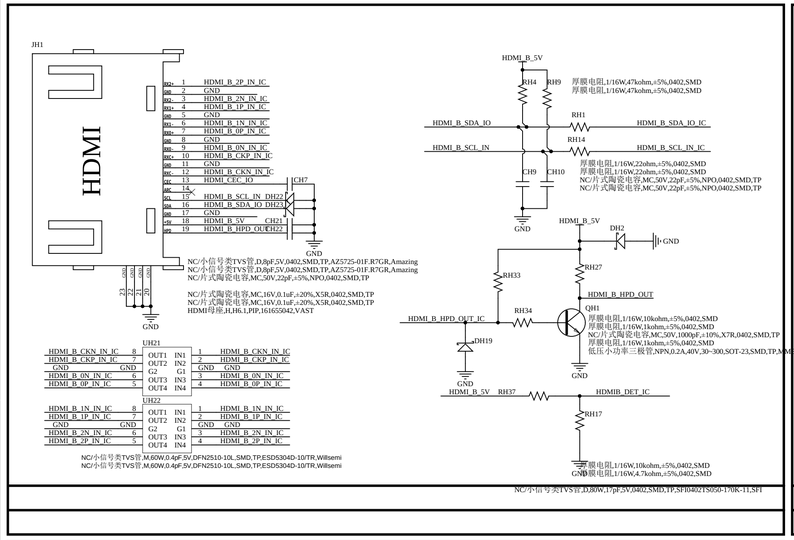
JH1
HDMI
HDMI_B_2P_IN_IC
HDMI_B_2N_IN_IC
HDMI_B_1P_IN_IC
HDMI_B_1N_IN_IC
HDMI_B_0P_IN_IC
HDMI_B_0N_IN_IC
HDMI_B_CKP_IN_IC
HDMI_B_CKN_IN_IC
HDMI_CEC_IO
HDMI_B_SCL_IN
HDMI_B_SDA_IO
HDMI_B_5V
CH21
HDMI_B_HPD_OUEH22
CH7
DH22
DH23
HDMI_B_5V
RH4
RH9
RH1
RH14
HDMI_B_SDA_IO
HDMI_B_SDA_IO_IC
HDMI_B_SCL_IN
HDMI_B_SCL_IN_IC
CH9
CH10
DH2
RH33
RH27
HDMI_B_HPD_OUT
RH34
QH1
HDMI_B_HPD_OUT_IC
DH19
HDMI_B_5V
RH37
HDMIB_DET_IC
RH17
UH21
UH22
HDMI_B_CKN_IN_IC
HDMI_B_CKP_IN_IC
HDMI_B_0N_IN_IC
HDMI_B_0P_IN_IC
HDMI_B_1N_IN_IC
HDMI_B_1P_IN_IC
HDMI_B_2N_IN_IC
HDMI_B_2P_IN_IC
NC/小信号类TVS管,M,60W,0.4pF,5V,DFN2510-10L,SMD,TP,ESD5304D-10/TR,Willsemi
NC/小信号类TVS管,M,60W,0.4pF,5V,DFN2510-10L,SMD,TP,ESD5304D-10/TR,Willsemi
NC/小信号类TVS管,D,8pF,5V,0402,SMD,TP,AZ5725-01F.R7GR,Amazing
NC/小信号类TVS管,D,8pF,5V,0402,SMD,TP,AZ5725-01F.R7GR,Amazing
NC/片式陶瓷电容,MC,50V,22pF,±5%,NPO,0402,SMD,TP
NC/片式陶瓷电容,MC,16V,0.1uF,±20%,X5R,0402,SMD,TP
NC/片式陶瓷电容,MC,16V,0.1uF,±20%,X5R,0402,SMD,TP
HDMI母座,H,H6.1,PIP,161655042,VAST
NC/片式陶瓷电容,MC,50V,22pF,±5%,NPO,0402,SMD,TP
NC/小信号类TVS管,D,8pF,5V,0402,SMD,TP,AZ5725-01F.R7GR,Amazing
NC/小信号类TVS管,D,8pF,5V,0402,SMD,TP,AZ5725-01F.R7GR,Amazing
NC/片式陶瓷电容,MC,16V,0.1uF,±20%,X5R,0402,SMD,TP
NC/片式陶瓷电容,MC,16V,0.1uF,±20%,X5R,0402,SMD,TP
HDMI母座,H,H6.1,PIP,161655042,VAST
NC/片式陶瓷电容,MC,50V,1000pF,±10%,X7R,0402,SMD,TP
厚膜电阻,1/16W,10kohm,±5%,0402,SMD
厚膜电阻,1/16W,1kohm,±5%,0402,SMD
低压小功率三极管,NPN,0.2A,40V,30~300,SOT-23,SMD,TP,MMBT3904,YJ
厚膜电阻,1/16W,4.7kohm,±5%,0402,SMD
厚膜电阻,1/16W,10kohm,±5%,0402,SMD
厚膜电阻,1/16W,47kohm,±5%,0402,SMD
厚膜电阻,1/16W,47kohm,±5%,0402,SMD
NC/小信号类TVS管,D,80W,17pF,5V,0402,SMD,TP,SFH0402TS050-170K-11,SFI

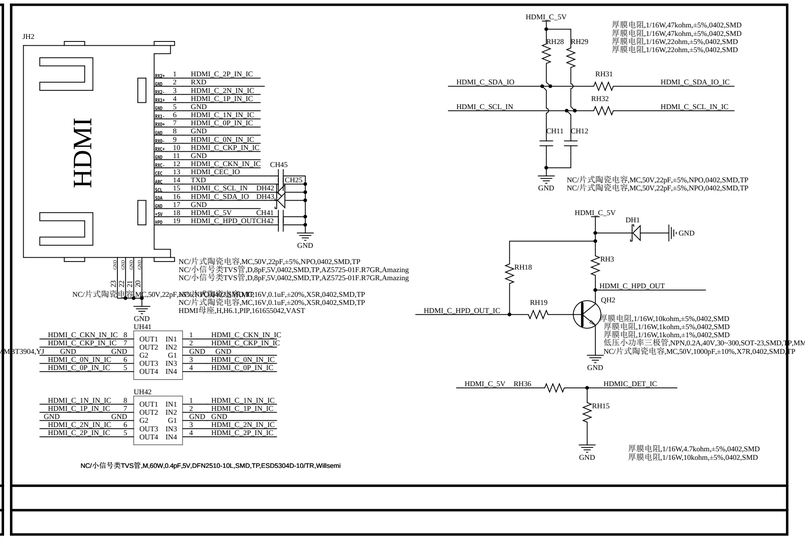
JH2
HDMI
HDMI_C_2P_IN_IC
HDMI_C_2N_IN_IC
HDMI_C_1P_IN_IC
HDMI_C_1N_IN_IC
HDMI_C_0P_IN_IC
HDMI_C_0N_IN_IC
HDMI_C_CKP_IN_IC
HDMI_C_CKN_IN_IC
HDMI_CEC_IO
HDMI_C_SCL_IN
HDMI_C_SDA_IO
HDMI_C_5V
CH41
CH42
CH45
CH25
HDMI_C_5V
RH28
RH29
HDMI_C_SDA_IO
HDMI_C_SDA_IO_IC
HDMI_C_SCL_IN
HDMI_C_SCL_IN_IC
RH31
RH32
CH11
CH12
DH1
RH18
RH3
HDMI_C_HPD_OUT
QH2
HDMI_C_HPD_OUT_IC
RH19
HDMI_C_5V
RH36
HDMIC_DET_IC
RH15
UH41
UH42
HDMI_C_CKN_IN_IC
HDMI_C_CKP_IN_IC
HDMI_C_0N_IN_IC
HDMI_C_0P_IN_IC
HDMI_C_1N_IN_IC
HDMI_C_1P_IN_IC
HDMI_C_2N_IN_IC
HDMI_C_2P_IN_IC
NC/小信号类TVS管,M,60W,0.4pF,5V,DFN2510-10L,SMD,TP,ESD5304D-10/TR,Willsemi
NC/片式陶瓷电容,MC,50V,22pF,±5%,NPO,0402,SMD,TP
NC/小信号类TVS管,D,8pF,5V,0402,SMD,TP,AZ5725-01F.R7GR,Amazing
NC/小信号类TVS管,D,8pF,5V,0402,SMD,TP,AZ5725-01F.R7GR,Amazing
NC/片式陶瓷电容,MC,50V,22pF,±5%,NPO,0402,SMD,TP
NC/片式陶瓷电容,MC,50V,22pF,±5%,NPO,0402,SMD,TP
NC/片式陶瓷电容,MC,16V,0.1uF,±20%,X5R,0402,SMD,TP
NC/片式陶瓷电容,MC,16V,0.1uF,±20%,X5R,0402,SMD,TP
HDMI母座,H,H6.1,PIP,161655042,VAST
NC/片式陶瓷电容,MC,50V,1000pF,±10%,X7R,0402,SMD,TP
厚膜电阻,1/16W,10kohm,±5%,0402,SMD
厚膜电阻,1/16W,1kohm,±5%,0402,SMD
厚膜电阻,1/16W,1kohm,±1%,0402,SMD
低压小功率三极管,NPN,0.2A,40V,30~300,SOT-23,SMD,TP,MMBT3904,YJ
厚膜电阻,1/16W,4.7kohm,±5%,0402,SMD
厚膜电阻,1/16W,10kohm,±5%,0402,SMD
厚膜电阻,1/16W,47kohm,±5%,0402,SMD
厚膜电阻,1/16W,47kohm,±5%,0402,SMD
厚膜电阻,1/16W,22ohm,±5%,0402,SMD
厚膜电阻,1/16W,22ohm,±5%,0402,SMD

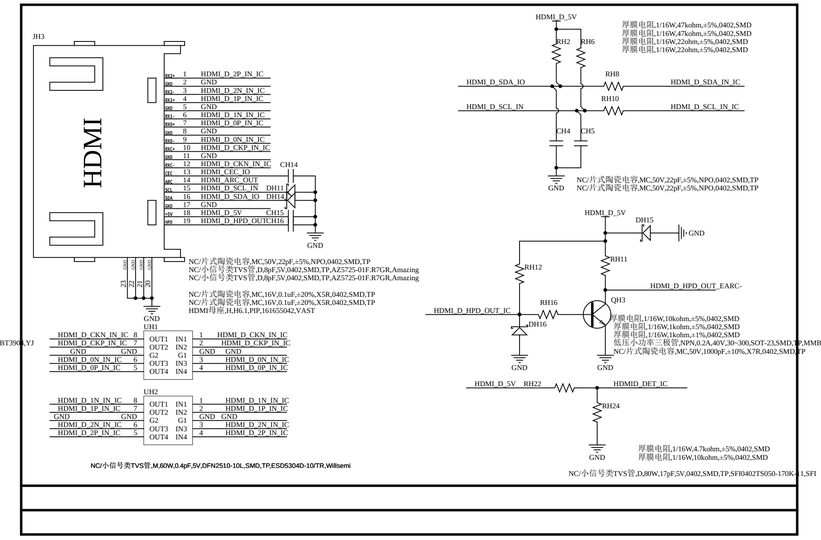
JH3
HDMI
HDMI_D_2P_IN_IC
HDMI_D_2N_IN_IC
HDMI_D_1P_IN_IC
HDMI_D_1N_IN_IC
HDMI_D_0P_IN_IC
HDMI_D_0N_IN_IC
HDMI_D_CKP_IN_IC
HDMI_D_CKN_IN_IC
HDMI_CEC_IO
HDMI_ARC_OUT
HDMI_D_SCL_IN
HDMI_D_SDA_IO
HDMI_D_5V
CH14
DH11
DH14
CH15
DH15
RH2
RH6
RH8
RH10
HDMI_D_SDA_IO
HDMI_D_SDA_IN_IC
HDMI_D_SCL_IN
HDMI_D_SCL_IN_IC
CH4
CH5
RH12
RH11
HDMI_D_HPD_OUT_EARC-
RH16
QH3
HDMI_D_HPD_OUT_IC
DH16
HDMI_D_5V
RH22
HDMID_DET_IC
RH24
UH1
UH2
HDMI_D_CKN_IN_IC
HDMI_D_CKP_IN_IC
HDMI_D_0N_IN_IC
HDMI_D_0P_IN_IC
HDMI_D_1N_IN_IC
HDMI_D_1P_IN_IC
HDMI_D_2N_IN_IC
HDMI_D_2P_IN_IC
NC/小信号类TVS管,M,60W,0.4pF,5V,DFN2510-10L,SMD,TP,ESD5304D-10/TR,Willsemi
NC/片式陶瓷电容,MC,50V,22pF,±5%,NPO,0402,SMD,TP
NC/小信号类TVS管,D,8pF,5V,0402,SMD,TP,AZ5725-01F.R7GR,Amazing
NC/小信号类TVS管,D,8pF,5V,0402,SMD,TP,AZ5725-01F.R7GR,Amazing
NC/片式陶瓷电容,MC,16V,0.1uF,±20%,X5R,0402,SMD,TP
NC/片式陶瓷电容,MC,16V,0.1uF,±20%,X5R,0402,SMD,TP
HDMI母座,H,H6.1,PIP,161655042,VAST
NC/片式陶瓷电容,MC,50V,1000pF,±10%,X7R,0402,SMD,TP
厚膜电阻,1/16W,4.7kohm,±5%,0402,SMD
厚膜电阻,1/16W,10kohm,±5%,0402,SMD
厚膜电阻,1/16W,1kohm,±5%,0402,SMD
厚膜电阻,1/16W,1kohm,±1%,0402,SMD
低压小功率三极管,NPN,0.2A,40V,30~300,SOT-23,SMD,TP,MMBT3904,YJ
NC/片式陶瓷电容,MC,50V,1000pF,±10%,X7R,0402,SMD,TP
厚膜电阻,1/16W,47kohm,±5%,0402,SMD
厚膜电阻,1/16W,47kohm,±5%,0402,SMD
厚膜电阻,1/16W,22ohm,±5%,0402,SMD
厚膜电阻,1/16W,22ohm,±5%,0402,SMD
NC/片式陶瓷电容,MC,50V,22pF,±5%,NPO,0402,SMD,TP
NC/片式陶瓷电容,MC,50V,22pF,±5%,NPO,0402,SMD,TP
NC/小信号类TVS管,D,80W,17pF,5V,0402,SMD,TP,SFH0402TS050-170K-11,SFI

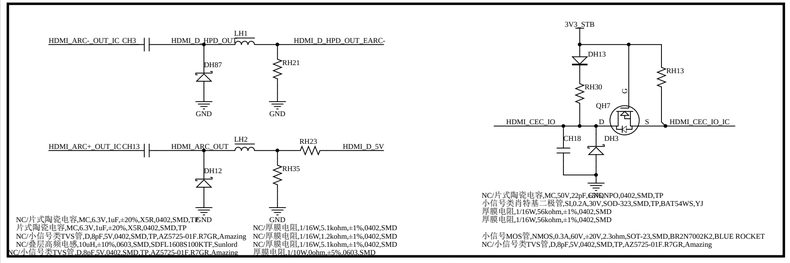
HDMI_ARC_OUT_IC CH3
HDMI_D_HPD_OUT
LH1
HDMI_D_HPD_OUT_EARC-
DH87
RH21
GND
GND
HDMI_ARC+_OUT_IC CH13
HDMI_ARC_OUT
LH2
RH23
HDMI_D_5V
DH12
RH35
GND
GND
3V3_STB
DH13
RH30
RH13
QH7
HDMI_CEC_IO
HDMI_CEC_IO_IC
CH18
DH3
NC/片式陶瓷电容,MC,6.3V,1uF,±20%,X5R,0402,SMD,TP,GND
片式陶瓷电容,MC,6.3V,1uF,±20%,X5R,0402,SMD,TP
NC/小信号类TVS管,D,8pF,5V,0402,SMD,TP,AZ5725-01F.R7GR,Amazing
NC/叠层蓝色铁氧体,10uH,±10%,0603,SMD,SDFL1608S100KTF,Sunlord
NC/小信号类TVS管,D,8pF,5V,0402,SMD,TP,AZ5725-01F.R7GR,Amazing
NC/厚膜电阻,1/16W,5.1kohm,±1%,0402,SMD
NC/厚膜电阻,1/16W,1.2kohm,±1%,0402,SMD
NC/厚膜电阻,1/16W,5.1kohm,±1%,0402,SMD
厚膜电阻,1/10W,0ohm,±5%,0603,SMD
NC/片式陶瓷电容,MC,50V,22pF,±5%,NPO,0402,SMD,TP
小信号类肖特基二极管,SI,0.2A,30V,SOD-323,SMD,TP,BAT54WS,YJ
厚膜电阻,1/16W,56kohm,±1%,0402,SMD
厚膜电阻,1/16W,56kohm,±1%,0402,SMD
小信号MOS管,NMOS,0.3A,60V,±20V,2.5ohm,SOT-23,SMD,BR2N7002K2,BLUE ROCKET
NC/小信号类TVS管,D,8pF,5V,0402,SMD,TP,AZ5725-01F.R7GR,Amazing

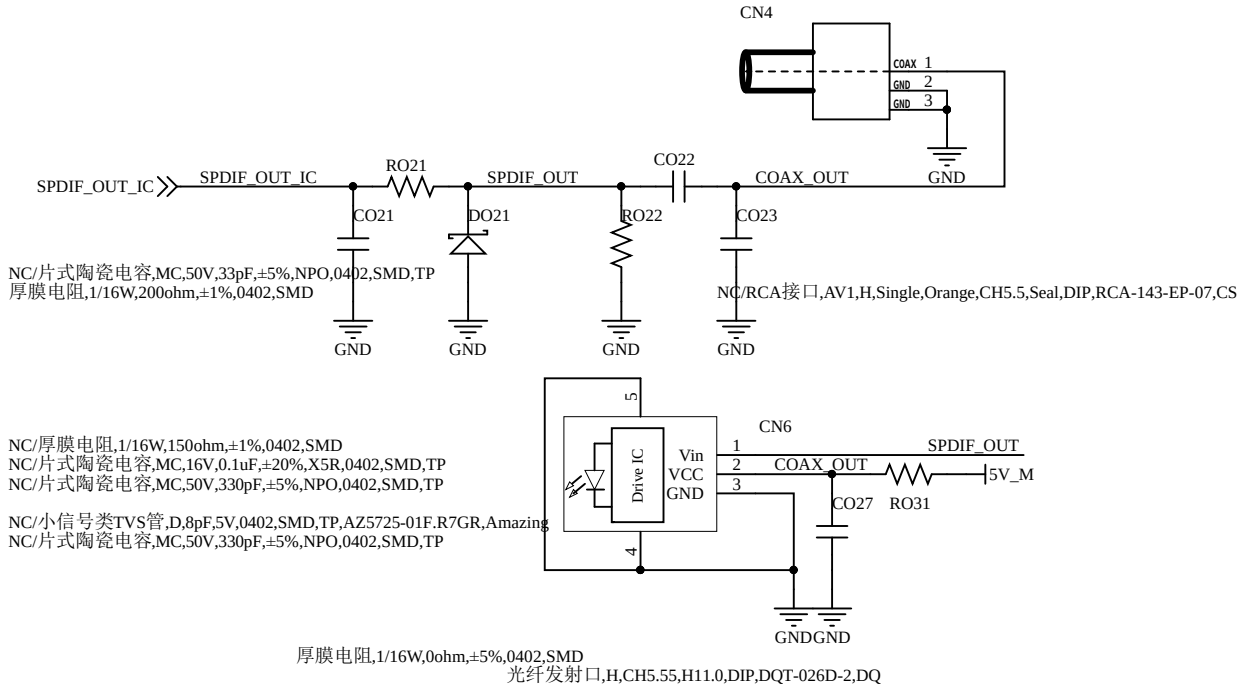
CN4
COAX 1
GND 2
GND 3
SPDIF_OUT_IC
SPDIF_OUT_IC
RO21
SPDIF_OUT
CO22
COAX_OUT
GND
CO21
DO21
RO22
CO23
NC/片式陶瓷电容,MC,50V,33pF,±5%,NPO,0402,SMD,TP
厚膜电阻,1/16W,200ohm,±1%,0402,SMD
NC/RCA接口,AV1,H,Single,Orange,CH5.5,Seal,DIP,RCA-143-EP-07,CS
GND
GND
GND
GND
NC/厚膜电阻,1/16W,150ohm,±1%,0402,SMD
NC/片式陶瓷电容,MC,16V,0.1uF,±20%,X5R,0402,SMD,TP
NC/片式陶瓷电容,MC,50V,330pF,±5%,NPO,0402,SMD,TP
NC/小信号类TVS管,D,8pF,5V,0402,SMD,TP,AZ5725-01F.R7GR,Amazing
NC/片式陶瓷电容,MC,50V,330pF,±5%,NPO,0402,SMD,TP
5
Drive IC
Vin
VCC
GND
4
CN6
1
2
3
SPDIF_OUT
COAX_OUT
5V_M
CO27
RO31
GNDGND
厚膜电阻,1/16W,0ohm,±5%,0402,SMD
光纤发射口,H,CH5.55,H11.0,DIP,DQT-026D-2,DQ

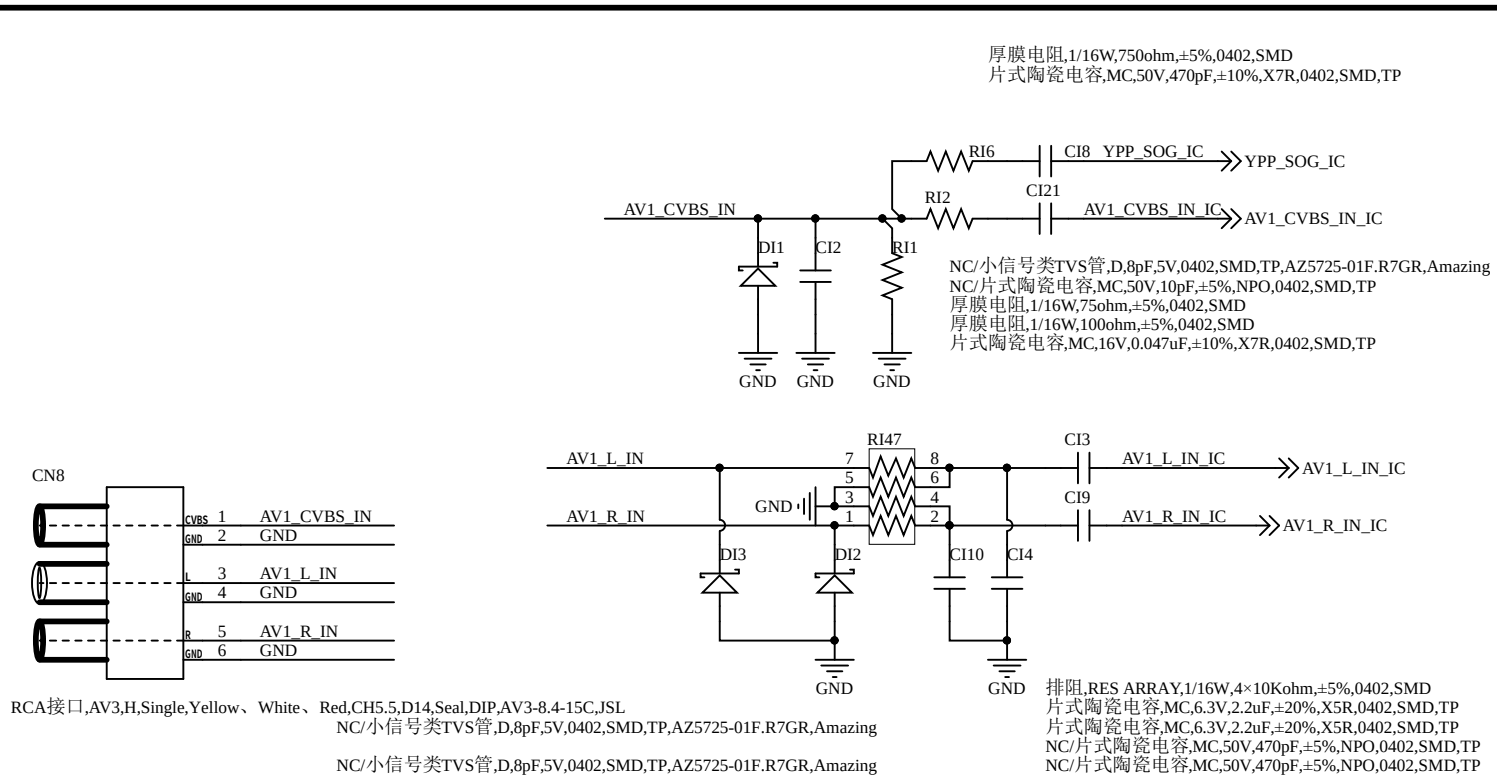
厚膜电阻,1/16W,750ohm,±5%,0402,SMD
片式陶瓷电容,MC,50V,470pF,±10%,X7R,0402,SMD,TP
RI6
CI8
YPP_SOG_IC
YPP_SOG_IC
RI2
CI21
AV1_CVBS_IN
AV1_CVBS_IN_IC
AV1_CVBS_IN_IC
DI1
CI2
RI1
NC/小信号类TVS管,D,8pF,5V,0402,SMD,TP,AZ5725-01F.R7GR,Amazing
NC/片式陶瓷电容,MC,50V,10pF,±5%,NPO,0402,SMD,TP
厚膜电阻,1/16W,75ohm,±5%,0402,SMD
厚膜电阻,1/16W,100ohm,±5%,0402,SMD
片式陶瓷电容,MC,16V,0.047uF,±10%,X7R,0402,SMD,TP
GND
GND
GND
CN8
CVBS 1 AV1_CVBS_IN
GND 2 GND
L 3 AV1_L_IN
GND 4 GND
R 5 AV1_R_IN
GND 6 GND
RI47
CI3
AV1_L_IN
7
8
5
6
AV1_L_IN_IC
AV1_L_IN_IC
GND
3
4
CI9
AV1_R_IN
1
2
AV1_R_IN_IC
AV1_R_IN_IC
DI3
DI2
CI10
CI4
GND
GND
RCA接口,AV3,H,Single,Yellow、White、Red,CH5.5,D14,Seal,DIP,AV3-8.4-15C,JSL
NC/小信号类TVS管,D,8pF,5V,0402,SMD,TP,AZ5725-01F.R7GR,Amazing
NC/小信号类TVS管,D,8pF,5V,0402,SMD,TP,AZ5725-01F.R7GR,Amazing
排阻,RES ARRAY,1/16W,4×10Kohm,±5%,0402,SMD
片式陶瓷电容,MC,6.3V,2.2uF,±20%,X5R,0402,SMD,TP
片式陶瓷电容,MC,6.3V,2.2uF,±20%,X5R,0402,SMD,TP
NC/片式陶瓷电容,MC,50V,470pF,±5%,NPO,0402,SMD,TP
NC/片式陶瓷电容,MC,50V,470pF,±5%,NPO,0402,SMD,TP

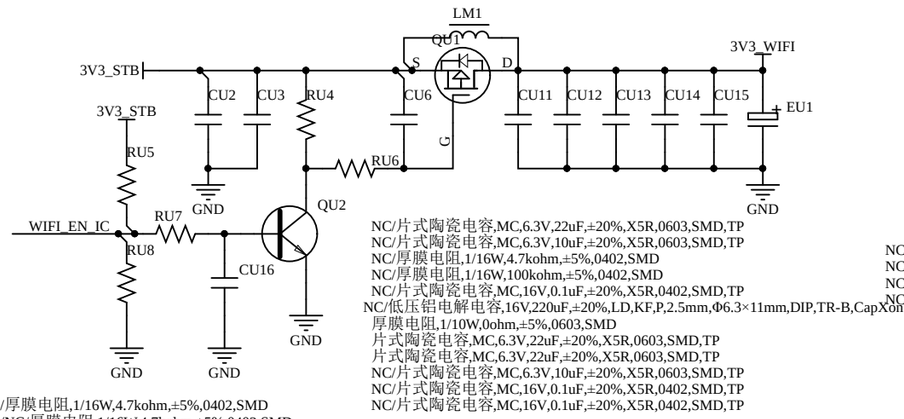

NC/片式陶瓷电容,MC,6.3V,22uF,±20%,X5R,0603,SMD,TP
NC/片式陶瓷电容,MC,6.3V,10uF,±20%,X5R,0603,SMD,TP
NC/厚膜电阻,1/16W,4.7kohm,±5%,0402,SMD
NC/厚膜电阻,1/16W,100kohm,±5%,0402,SMD
NC/片式陶瓷电容,MC,16V,0.1uF,±20%,X5R,0402,SMD,TP
NC/低压铝电解电容,16V,220uF,±20%,LD,KF,P,2.5mm,Φ6.3×11mm,DIP,TR-B,CapXon
厚膜电阻,1/10W,0ohm,±5%,0603,SMD
片式陶瓷电容,MC,6.3V,22uF,±20%,X5R,0603,SMD,TP
片式陶瓷电容,MC,6.3V,22uF,±20%,X5R,0603,SMD,TP
NC/片式陶瓷电容,MC,6.3V,10uF,±20%,X5R,0603,SMD,TP
NC/片式陶瓷电容,MC,16V,0.1uF,±20%,X5R,0402,SMD,TP
NC/片式陶瓷电容,MC,16V,0.1uF,±20%,X5R,0402,SMD,TP

NC/厚膜电阻,1/16W,4.7kohm,±5%,0402,SMD
NC/NC/厚膜电阻,1/16W,4.7kohm,±5%,0402,SMD
NC/厚膜电阻,1/16W,10kohm,±5%,0402,SMD
NC/片式陶瓷电容,MC,16V,0.1uF,±20%,X5R,0402,SMD,TP
NC/低压小功率三极管,NPN,0.2A,40V,30~300,SOT-23,SMD,TP,MMBT3904,YJ
NC/低压功率MOS管,PMOS,-4.4A,-30V,±12V,37.5mohm,SOT-23,SMD,NCE3401BY,NCEPOWER

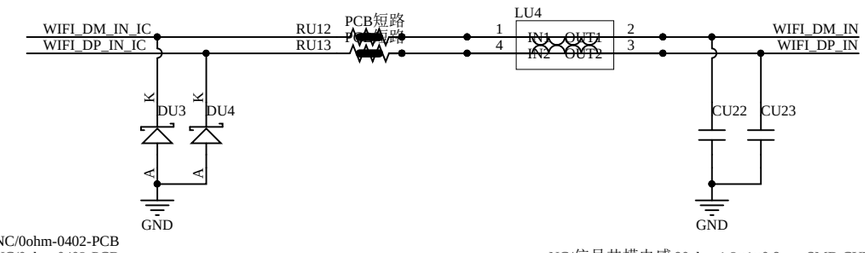

NC/0ohm-0402-PCB
NC/0ohm-0402-PCB
NC/小信号类TVS管,D,0.5pF,5.3V,0402,SMD,TP,AZ5325-01F.R7G,Amazing
NC/小信号类TVS管,D,0.5pF,5.3V,0402,SMD,TP,AZ5325-01F.R7G,Amazing

NC/信号共模电感,90ohm,1.2×1×0.8mm,SMD,CUW111T-900Y-N,CHILISIN
NC/片式陶瓷电容,MC,50V,2pF,±0.25pF,NPO,0402,SMD,TP
NC/片式陶瓷电容,MC,50V,2pF,±0.25pF,NPO,0402,SMD,TP

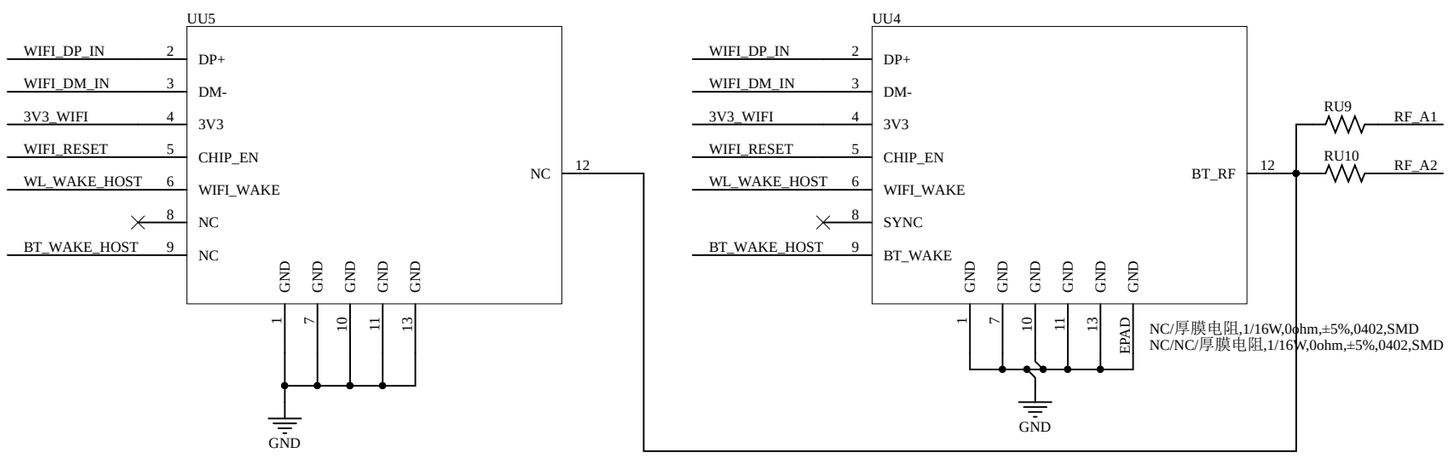

客供,WiFi+LAN模组,USB,IEEE 802.11b/g/n,2.4GHz,2T2R,SMD,MT7603U,EL.MT7603UN-WFT,AL-Link,caixun
NC/客供,WiFi+蓝牙模组,USB,IEEE 802.11a/b/g/n/ac,2.4+5.8GHz,BT5.1;BT2.1+EDR;BT4.2,2T2R,SMD,MT7663BUN,EL.MT7663BUN-WFT,AL-Link,caixun

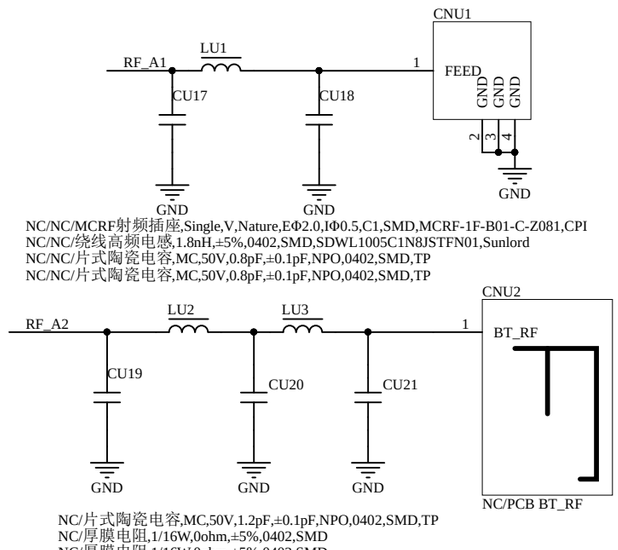

NC/NC/MCRF射频插座,Single,V,Nature,EΦ2.0,IΦ0.5,C1,SMD,MCRF-1F-B01-C-Z081,CPI
NC/NC/绕线高频电感,1.8nH,±5%,0402,SMD,SDWL1005C1N8JSTFN01,Sunlord
NC/NC/片式陶瓷电容,MC,50V,0.8pF,±0.1pF,NPO,0402,SMD,TP
NC/NC/片式陶瓷电容,MC,50V,0.8pF,±0.1pF,NPO,0402,SMD,TP

NC/片式陶瓷电容,MC,50V,1.2pF,±0.1pF,NPO,0402,SMD,TP
NC/厚膜电阻,1/16W,0ohm,±5%,0402,SMD
NC/厚膜电阻,1/16W,0ohm,±5%,0402,SMD
NC/片式陶瓷电容,MC,50V,1.2pF,±0.1pF,NPO,0402,SMD,TP
NC/片式陶瓷电容,MC,50V,1.2pF,±0.1pF,NPO,0402,SMD,TP

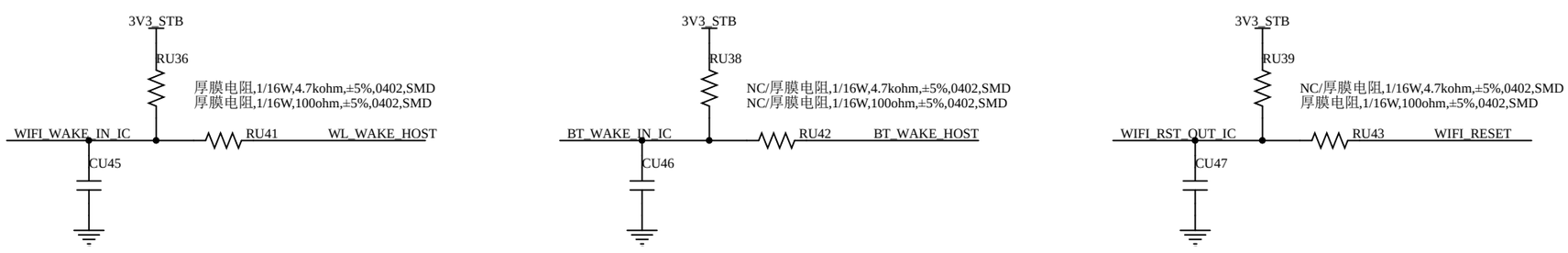

NC/片式陶瓷电容,MC,50V,22pF,±5%,NPO,0402,SMD,TP
NC/NC/片式陶瓷电容,MC,50V,22pF,±5%,NPO,0402,SMD,TP
NC/片式陶瓷电容,MC,50V,22pF,±5%,NPO,0402,SMD,TP

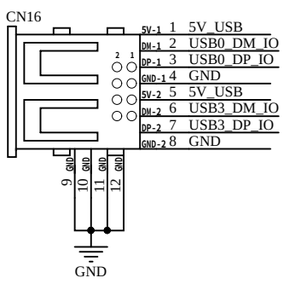

USB 2.0 Type A母座,Double,H,H16.05,Black,Flange,DIP,WLUS-074B,WLCO

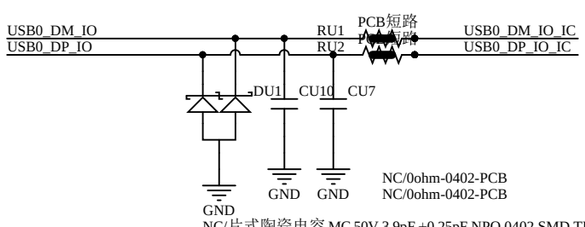

NC/0ohm-0402-PCB
NC/0ohm-0402-PCB
NC/片式陶瓷电容,MC,50V,3.9pF,±0.25pF,NPO,0402,SMD,TP
NC/片式陶瓷电容,MC,50V,3.9pF,±0.25pF,NPO,0402,SMD,TP
NC/小信号类TVS管,M,42W,0.4pF,5V,SOT-23,SMD,TP,ESDSLC5V0E,YJ

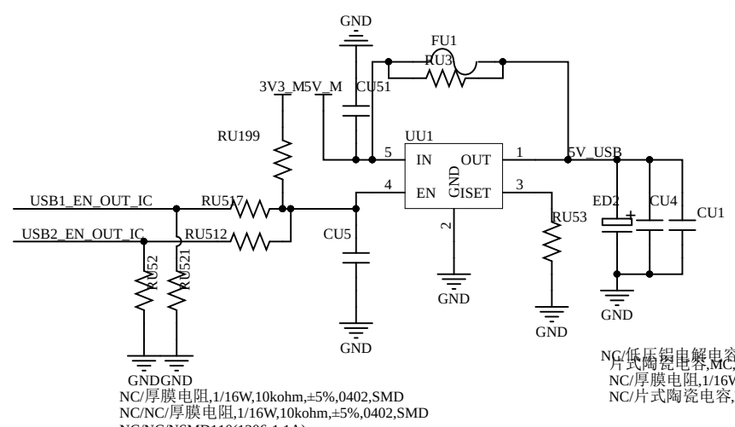

NC/低压铝电解电容,10V,220uF,±20%,VS,Φ6.3×5.8,SMD,TP-O,Chang
片式陶瓷电容,MC,6.3V,10uF,±20%,X5R,0603,SMD,TP
NC/厚膜电阻,1/16W,10kohm,±5%,0402,SMD
NC/片式陶瓷电容,MC,6.3V,1uF,±20%,X5R,0402,SMD,TP

NC/厚膜电阻,1/16W,10kohm,±5%,0402,SMD
NC/NC/厚膜电阻,1/16W,10kohm,±5%,0402,SMD
NC/NC/NSMD110(1206-1.1A)
NC/NC/片式陶瓷电容,MC,16V,0.1uF,±20%,X5R,0402,SMD,TP
NC/限流开关,2.5~5.5V,2A,2.4A,discharge,H,SOT23-5,SMD,TMI6263BH,TOLL
厚膜电阻,1/10W,0ohm,±5%,0603,SMD
NC/厚膜电阻,1/16W,4.7kohm,±5%,0402,SMD
NC/NC/厚膜电阻,1/16W,10kohm,±5%,0402,SMD
NC/NC/厚膜电阻,1/16W,10kohm,±5%,0402,SMD
NC/NC/片式陶瓷电容,MC,6.3V,10uF,±20%,X5R,0603,SMD,TP

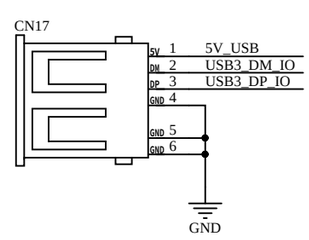

NC/USB 2.0 Type A母座,Single,H,H7.54,White,Flange,DIP,08100-00S051,GLGNET

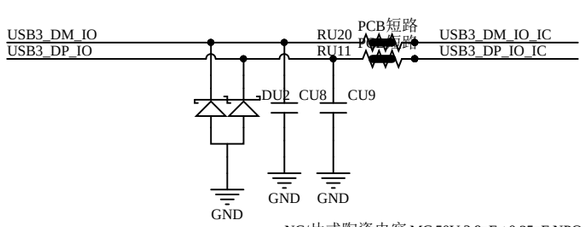

NC/片式陶瓷电容,MC,50V,3.9pF,±0.25pF,NPO,0402,SMD,TP
NC/片式陶瓷电容,MC,50V,3.9pF,±0.25pF,NPO,0402,SMD,TP
NC/0ohm-0402-PCB
NC/0ohm-0402-PCB
NC/小信号类TVS管,M,42W,0.4pF,5V,SOT-23,SMD,TP,ESDSLC5V0E,YJ

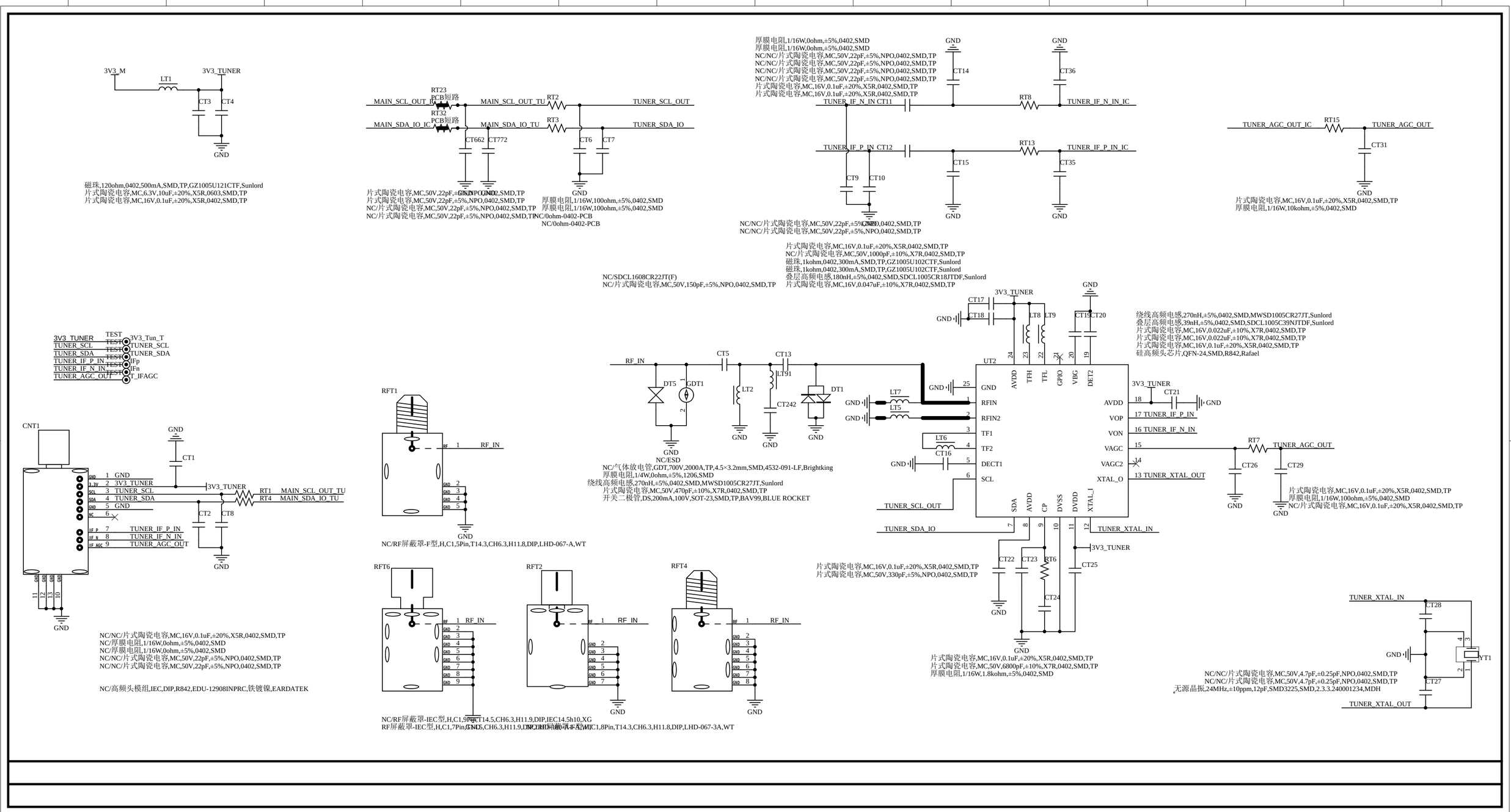
3V3_M
LT1
3V3_TUNER
CT3
CT4
GND
磁珠,120ohm,0402,500mA,SMD,TP,GZ1005U121CTF,Sunlord
片式陶瓷电容,MC,6.3V,10uF,±20%,X5R,0603,SMD,TP
片式陶瓷电容,MC,16V,0.1uF,±20%,X5R,0402,SMD,TP
RT23
PCB短路
MAIN_SCL_OUT_IC
MAIN_SCL_OUT_TU
RT2
TUNER_SCL_OUT
RT32
PCB短路
MAIN_SDA_IO_IC
MAIN_SDA_IO_TU
RT3
TUNER_SDA_IO
CT662
CT772
CT6
CT7
片式陶瓷电容,MC,50V,22pF,±5%,NPO,0402,SMD,TP
片式陶瓷电容,MC,50V,22pF,±5%,NPO,0402,SMD,TP
NC/片式陶瓷电容,MC,50V,22pF,±5%,NPO,0402,SMD,TP
NC/片式陶瓷电容,MC,50V,22pF,±5%,NPO,0402,SMD,TP
厚膜电阻,1/16W,100ohm,±5%,0402,SMD
厚膜电阻,1/16W,100ohm,±5%,0402,SMD
NC/0ohm-0402-PCB
NC/0ohm-0402-PCB
厚膜电阻,1/16W,0ohm,±5%,0402,SMD
厚膜电阻,1/16W,0ohm,±5%,0402,SMD
NC/NC/片式陶瓷电容,MC,50V,22pF,±5%,NPO,0402,SMD,TP
NC/NC/片式陶瓷电容,MC,50V,22pF,±5%,NPO,0402,SMD,TP
NC/NC/片式陶瓷电容,MC,50V,22pF,±5%,NPO,0402,SMD,TP
NC/NC/片式陶瓷电容,MC,50V,22pF,±5%,NPO,0402,SMD,TP
片式陶瓷电容,MC,16V,0.1uF,±20%,X5R,0402,SMD,TP
片式陶瓷电容,MC,16V,0.1uF,±20%,X5R,0402,SMD,TP
CT14
CT36
TUNER_IF_N_IN CT11
RT8
TUNER_IF_N_IN_IC
TUNER_IF_P_IN CT12
RT13
TUNER_IF_P_IN_IC
CT15
CT35
CT9
CT10
TUNER_AGC_OUT_IC
RT15
TUNER_AGC_OUT
CT31
片式陶瓷电容,MC,16V,0.1uF,±20%,X5R,0402,SMD,TP
厚膜电阻,1/16W,10kohm,±5%,0402,SMD
NC/NC/片式陶瓷电容,MC,50V,22pF,±5%,NPO,0402,SMD,TP
NC/NC/片式陶瓷电容,MC,50V,22pF,±5%,NPO,0402,SMD,TP
片式陶瓷电容,MC,16V,0.1uF,±20%,X5R,0402,SMD,TP
NC/片式陶瓷电容,MC,50V,1000pF,±10%,X7R,0402,SMD,TP
磁珠,1kohm,0402,300mA,SMD,TP,GZ1005U102CTF,Sunlord
磁珠,1kohm,0402,300mA,SMD,TP,GZ1005U102CTF,Sunlord
叠层高频电感,180nH,±5%,0402,SMD,SDCL1005CR18JTDF,Sunlord
片式陶瓷电容,MC,16V,0.047uF,±10%,X7R,0402,SMD,TP
NC/SDCL1608CR22JT(F)
NC/片式陶瓷电容,MC,50V,150pF,±5%,NPO,0402,SMD,TP
3V3_TUNER
CT17
CT18
LT8
LT9
CT19
CT20
绕线高频电感,270nH,±5%,0402,SMD,MWSD1005CR27JT,Sunlord
叠层高频电感,39nH,±5%,0402,SMD,SDCL1005C39NJTDF,Sunlord
片式陶瓷电容,MC,16V,0.022uF,±10%,X7R,0402,SMD,TP
片式陶瓷电容,MC,16V,0.022uF,±10%,X7R,0402,SMD,TP
片式陶瓷电容,MC,16V,0.1uF,±20%,X5R,0402,SMD,TP
硅高频头芯片,QFN-24,SMD,R842,Rafael
3V3_TUNER
TEST
3V3_Tun_T
TUNER_SCL
TUNER_SCL
TUNER_SDA
TUNER_SDA
TUNER_IF_P_IN
IFp
TUNER_IF_N_IN
IFn
TUNER_AGC_OUT
T_IFAGC
RF_IN
CT5
CT13
DT5
GDT1
LT2
LT191
CT242
DT1
NC/ESD
NC/气体放电管,GDT,700V,2000A,TP,4.5×3.2mm,SMD,4532-091-LF,Brightking
厚膜电阻,1/4W,0ohm,±5%,1206,SMD
绕线高频电感,270nH,±5%,0402,SMD,MWSD1005CR27JT,Sunlord
片式陶瓷电容,MC,50V,470pF,±10%,X7R,0402,SMD,TP
开关二极管,DS,200mA,100V,SOT-23,SMD,TP,BAV99,BLUE ROCKET
UT2
LT7
LT5
LT6
CT16
AVDD
TFH
TFL
GPIO
VBG
DET2
GND
RFIN
RFIN2
TF1
TF2
DECT1
SCL
SDA
AVDD
CP
DVSS
DVDD
XTAL_I
VOP
VON
VAGC
VAGC2
XTAL_O
TUNER_SCL_OUT
TUNER_SDA_IO
TUNER_XTAL_IN
TUNER_XTAL_OUT
CT21
CT26
RT7
CT29
片式陶瓷电容,MC,16V,0.1uF,±20%,X5R,0402,SMD,TP
厚膜电阻,1/16W,100ohm,±5%,0402,SMD
NC/片式陶瓷电容,MC,16V,0.1uF,±20%,X5R,0402,SMD,TP
CNT1
CT1
3V3_TUNER
RT1
RT4
MAIN_SCL_OUT_TU
MAIN_SDA_IO_TU
CT2
CT8
TUNER_IF_P_IN
TUNER_IF_N_IN
TUNER_AGC_OUT
RFT1
NC/RF屏蔽罩-F型,H,C1,5Pin,T14.3,CH6.3,H11.8,DIP,LHD-067-A,WT
CT22
CT23
RT6
CT24
CT25
片式陶瓷电容,MC,16V,0.1uF,±20%,X5R,0402,SMD,TP
片式陶瓷电容,MC,50V,330pF,±5%,NPO,0402,SMD,TP
片式陶瓷电容,MC,16V,0.1uF,±20%,X5R,0402,SMD,TP
片式陶瓷电容,MC,50V,6800pF,±10%,X7R,0402,SMD,TP
厚膜电阻,1/16W,1.8kohm,±5%,0402,SMD
NC/NC/片式陶瓷电容,MC,16V,0.1uF,±20%,X5R,0402,SMD,TP
NC/NC/厚膜电阻,1/16W,0ohm,±5%,0402,SMD
NC/厚膜电阻,1/16W,0ohm,±5%,0402,SMD
NC/NC/片式陶瓷电容,MC,50V,22pF,±5%,NPO,0402,SMD,TP
NC/NC/片式陶瓷电容,MC,50V,22pF,±5%,NPO,0402,SMD,TP
NC/高频头模组,IEC,DIP,R842,EDU-12908INPRC,铁镀镍,EARDATEK
RFT6
RFT2
RFT4
NC/RF屏蔽罩-IEC型,H,C1,9Pin,T14.5,CH6.3,H11.9,DIP,IEC14.5h10,XG
RF屏蔽罩-IEC型,H,C1,7Pin,T14.5,CH6.3,H11.9,DIP,IEC14.5h10,XG
NC/RF屏蔽罩-F型,H,C1,8Pin,T14.3,CH6.3,H11.8,DIP,LHD-067-3A,WT
TUNER_XTAL_IN
CT28
YT1
CT27
TUNER_XTAL_OUT
NC/NC/片式陶瓷电容,MC,50V,4.7pF,±0.25pF,NPO,0402,SMD,TP
NC/NC/片式陶瓷电容,MC,50V,4.7pF,±0.25pF,NPO,0402,SMD,TP
无源晶振,24MHz,±10ppm,12pF,SMD3225,SMD,2.3.3.240001234,MDH
3V3_M
LT61
3V3_TUNER_S
CT61
CT62
CT63
磁珠,120ohm,0402,500mA,SMD,TP,GZ1005U121CTF,Sunlord
片式陶瓷电容,MC,6.3V,10uF,±20%,X5R,0603,SMD,TP
片式陶瓷电容,MC,16V,0.1uF,±20%,X5R,0402,SMD,TP
NC/NC/片式陶瓷电容,MC,50V,1000pF,±20%,X7R,0402,SMD,TP
MAIN_SCL_OUT_TU
RT61
TUNER_S_SCL_OUT
MAIN_SDA_IO_TU
RT62
TUNER_S_SDA_IO
CT40
CT41
厚膜电阻,1/16W,100ohm,±5%,0402,SMD
厚膜电阻,1/16W,100ohm,±5%,0402,SMD
片式陶瓷电容,MC,50V,22pF,±5%,NPO,0402,SMD,TP
片式陶瓷电容,MC,50V,22pF,±5%,NPO,0402,SMD,TP
片式陶瓷电容,MC,16V,10uF,±20%,X5R,0805,SMD,TP
NC/NC/片式陶瓷电容,MC,16V,0.1uF,±20%,X5R,0402,SMD,TP
功率类肖特基二极管,SI,1A,40V,DO-214AC,SMD,TP,SS14A,YJ
片式陶瓷电容,MC,25V,22uF,±20%,X5R,0805,SMD,TP
NC/片式陶瓷电容,MC,25V,10uF,±10%,X5R,0805,SMD,TP
NC/NC/片式陶瓷电容,MC,25V,0.1uF,±20%,X5R,0402,SMD,TP
功率电感,10uH,1.5A,4×4×3mm,SMD,CKCS4030-10UH/M-9CX-2226,CK
12V
LT101
DT101
CT102
CT103
CT104
CT105
CT106
3V3_M
RZ3
RZ2
RZ1
UT101
LNB_EN
RP7
LNB_SEL
LNB_DISEQC_OUT_IC
VIN
EN
H_L
TONE
LX
BOOST
VCP
VLNB
EPAD
CT107
RZ6
RZ5
RZ4
CT108
DT103
LT102
LNB_PW
DT104
CT109
CT120
DT105
CT122
CT123
CT124
片式陶瓷电容,MC,50V,100pF,±5%,NPO,0402,SMD,TP
NC/NC/片式陶瓷电容,MC,50V,0.1uF,±10%,X7R,0603,SMD,TP
磁珠,120ohm,0603,2A,SMD,TP,HCB1608KF-121T20,TAI-TECH
NC/NC/功率类TVS管,S,1500W,20V,SMC,SMD,TP,SMCJ20A,YJ
片式陶瓷电容,MC,50V,100pF,±5%,NPO,0402,SMD,TP
NC/NC/片式陶瓷电容,MC,50V,3.9pF,±0.25pF,NPO,0402,SMD,TP
片式陶瓷电容,MC,50V,100pF,±5%,NPO,0402,SMD,TP
片式陶瓷电容,MC,50V,0.01uF,±10%,X7R,0402,SMD,TP
片式陶瓷电容,MC,50V,0.1uF,±10%,X7R,0603,SMD,TP
普通大功率整流二极管,SI,1A,1000V,SMAF,SMD,TP-O,M7F,YJ
NC/普通大功率整流二极管,SI,1A,1000V,SMAF,SMD,TP-O,M7F,YJ
LNB芯片,Non-Syn,9~14V,500mA,1MHz,19V,14V,1.5A,ESOP-8,SMD,STI8036B,TOLL
NC/NC/厚膜电阻,1/16W,10kohm,±5%,0402,SMD
NC/NC/厚膜电阻,1/16W,10kohm,±5%,0402,SMD
NC/NC/厚膜电阻,1/16W,10kohm,±5%,0402,SMD
排阻,RES ARRAY,1/16W,4×100ohm,±5%,0402,SMD
NC/厚膜电阻,1/16W,100kohm,±5%,0402,SMD
NC/厚膜电阻,1/16W,10kohm,±5%,0402,SMD
厚膜电阻,1/16W,10kohm,±5%,0402,SMD
片式陶瓷电容,MC,16V,0.1uF,±20%,X5R,0402,SMD,TP
片式陶瓷电容,MC,16V,0.1uF,±20%,X5R,0402,SMD,TP
片式陶瓷电容,MC,16V,0.1uF,±20%,X5R,0402,SMD,TP
片式陶瓷电容,MC,16V,0.1uF,±20%,X5R,0402,SMD,TP
NC/0ohm-0402-PCB
NC/0ohm-0402-PCB
NC/0ohm-0402-PCB
NC/0ohm-0402-PCB
TUNER_S_IP_IN
CT74
R63
PCB短路
TUNER_S_IP_IN_IC
TUNER_S_IN_IN
CT75
R64
PCB短路
TUNER_S_IN_IN_IC
TUNER_S_QN_IN
CT76
R65
PCB短路
TUNER_S_QN_IN_IC
TUNER_S_QP_IN
CT77
R66
PCB短路
TUNER_S_QP_IN_IC
CT70
CT71
CT72
CT73
NC/片式陶瓷电容,MC,50V,4.7pF,±0.25pF,NPO,0402,SMD,TP
NC/片式陶瓷电容,MC,50V,4.7pF,±0.25pF,NPO,0402,SMD,TP
NC/片式陶瓷电容,MC,50V,4.7pF,±0.25pF,NPO,0402,SMD,TP
NC/片式陶瓷电容,MC,50V,4.7pF,±0.25pF,NPO,0402,SMD,TP
TUNER_S_AGC_OUT_IC
RT79
TUNER_S_AGC_OUT
CT86
片式陶瓷电容,MC,16V,0.1uF,±20%,X5R,0402,SMD,TP
厚膜电阻,1/16W,10kohm,±5%,0402,SMD
LNB_PW
CT92
CT93
片式陶瓷电容,MC,50V,100pF,±5%,NPO,0402,SMD,TP
NC/片式陶瓷电容,MC,50V,47pF,±5%,NPO,0402,SMD,TP
片式陶瓷电容,MC,50V,100pF,±5%,NPO,0402,SMD,TP
片式陶瓷电容,MC,16V,0.1uF,±20%,X5R,0402,SMD,TP
片式陶瓷电容,MC,16V,0.1uF,±20%,X5R,0402,SMD,TP
片式陶瓷电容,MC,16V,0.1uF,±20%,X5R,0402,SMD,TP
硅高频头芯片,QFN-20,SMD,RT720,Rafael
RFT63
CT91
LNB_PW
3V3_TUNER_S
TUNER_S_AGC
TUNER_S_QP_IN
TUNER_S_QN_IN
TUNER_S_IN_IN
TUNER_S_IP_IN
TUNER_S_SDA
TUNER_S_SCL
CLK-OUT
3V3_TUNER_S
RT73
TUNER_S_AGC_OUT
CT89
RT9
RT10
MAIN_SDA_IO_TU
MAIN_SCL_OUT_TU
T2
T1
CT94
DT61
CT32
LT65
RT74
叠层高频电感,22nH,±5%,0402,SMD,SDCL1005C22NJTDF,Sunlord
片式陶瓷电容,MC,50V,47pF,±5%,NPO,0402,SMD,TP
叠层高频电感,3.3nH,±0.3nH,0402,SMD
片式陶瓷电容,MC,50V,0.5pF,±0.1pF,NPO,0402,SMD,TP
开关二极管,DS,200mA,100V,SOT-23,SMD,TP,BAV99,BLUE ROCKET
CT95
TUNER_S_SDA_IO
TUNER_S_SCL_OUT
UT62
RF_IN
GND
VBAT
SDA
SCLK
EPAD
GND
DET
XT
VBAT
VBG
VOP
VON
VONQ
VOPQ
CLK_OUT
VDD
CP
XTAL_I
XTAL_O
VAGC
CT96
CT97
CT98
片式陶瓷电容,MC,50V,4.7pF,±0.25pF,NPO,0402,SMD,TP
片式陶瓷电容,MC,50V,4.7pF,±0.25pF,NPO,0402,SMD,TP
片式陶瓷电容,MC,50V,4.7pF,±0.25pF,NPO,0402,SMD,TP
片式陶瓷电容,MC,50V,4.7pF,±0.25pF,NPO,0402,SMD,TP
TUNER_S_IP_IN
TUNER_S_IN_IN
TUNER_S_QN_IN
TUNER_S_QP_IN
CT66
CT67
CT68
CT69
NC/RF屏蔽罩-F型,H,C1,5Pin,T14.3,CH6.3,H11.8,DIP,RF067-D-F01T3NY,ASDZ
RF屏蔽罩-F型,H,C1,8Pin,T14.3,CH6.3,H11.8,DIP,LHD-067-3A,WT
3V3_TUNER_S
CT99
CT80
RT76
TUNER_S_AGC_OUT
CT90
CT81
RT75
TUNER_S_XTAL_IN
TUNER_S_XTAL_OUT
CT88
CT87
片式陶瓷电容,MC,6.3V,2.2uF,±20%,X5R,0402,SMD,TP
厚膜电阻,1/16W,3.3kohm,±5%,0402,SMD
片式陶瓷电容,MC,50V,1500pF,±10%,X7R,0402,SMD,TP
片式陶瓷电容,MC,50V,82pF,±5%,NPO,0402,SMD,TP
NC/NC/片式陶瓷电容,MC,50V,4.7pF,±0.25pF,NPO,0402,SMD,TP
厚膜电阻,1/16W,100ohm,±5%,0402,SMD
片式陶瓷电容,MC,16V,0.1uF,±20%,X5R,0402,SMD,TP
NC/NC/片式陶瓷电容,MC,50V,4.7pF,±0.25pF,NPO,0402,SMD,TP
TUNER_S_XTAL_IN
CT82
YT61
CT83
TUNER_S_XTAL_OUT
片式陶瓷电容,MC,50V,1.2pF,±0.25pF,NPO,0402,SMD,TP
片式陶瓷电容,MC,50V,1.2pF,±0.25pF,NPO,0402,SMD,TP
无源晶振,27MHz,±10ppm,20pF,SMD3225,SMD,CF4027M00020T2115109,JWT
LNB_13V/18V
3V3_TUN_S
S_AGC
S_SCL
S_SDA
S_IP
S_IM
S_QM
S_QP

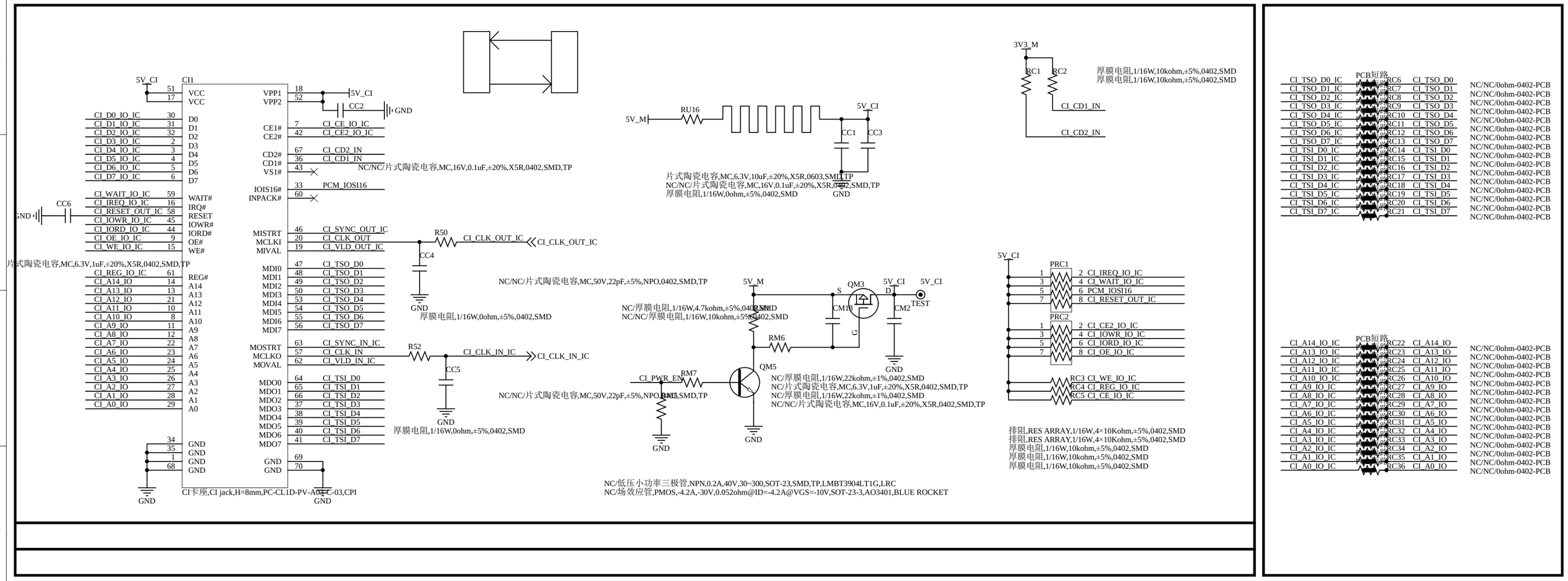
CI1
5V_CI
VCC 51
VCC 17
CI_D0_IO_IC 30 D0
CI_D1_IO_IC 31 D1
CI_D2_IO_IC 32 D2
CI_D3_IO_IC 2 D3
CI_D4_IO_IC 3 D4
CI_D5_IO_IC 4 D5
CI_D6_IO_IC 5 D6
CI_D7_IO_IC 6 D7
CI_WAIT_IO_IC 59 WAIT#
CI_IREQ_IO_IC 16 IRQ#
CI_RESET_OUT_IC 58 RESET
CI_IOWR_IO_IC 45 IOWR#
CI_IORD_IO_IC 44 IORD#
CI_OE_IO_IC 9 OE#
CI_WE_IO_IC 15 WE#
CC6
GND
片式陶瓷电容,MC,6.3V,1uF,±20%,X5R,0402,SMD,TP
CI_REG_IO_IC 61 REG#
CI_A14_IO 14 A14
CI_A13_IO 13 A13
CI_A12_IO 21 A12
CI_A11_IO 10 A11
CI_A10_IO 8 A10
CI_A9_IO 11 A9
CI_A8_IO 12 A8
CI_A7_IO 22 A7
CI_A6_IO 23 A6
CI_A5_IO 24 A5
CI_A4_IO 25 A4
CI_A3_IO 26 A3
CI_A2_IO 27 A2
CI_A1_IO 28 A1
CI_A0_IO 29 A0
34 GND
35 GND
1 GND
68 GND
VPP1 18
VPP2 52
5V_CI
CC2
GND
CE1# 7 CI_CE_IO_IC
CE2# 42 CI_CE2_IO_IC
CD2# 67 CI_CD2_IN
CD1# 36 CI_CD1_IN
VS1# 43
NC/NC/片式陶瓷电容,MC,16V,0.1uF,±20%,X5R,0402,SMD,TP
IOIS16# 33 PCM_IOSI16
INPACK# 60
MISTRT 46 CI_SYNC_OUT_IC
MCLKI 20 CI_CLK_OUT
MIVAL 19 CI_VLD_OUT_IC
R50
CI_CLK_OUT_IC
CI_CLK_OUT_IC
CC4
GND
厚膜电阻,1/16W,0ohm,±5%,0402,SMD
MDI0 47 CI_TSO_D0
MDI1 48 CI_TSO_D1
MDI2 49 CI_TSO_D2
MDI3 50 CI_TSO_D3
MDI4 53 CI_TSO_D4
MDI5 54 CI_TSO_D5
MDI6 55 CI_TSO_D6
MDI7 56 CI_TSO_D7
MOSTRT 63 CI_SYNC_IN_IC
MCLKO 57 CI_CLK_IN
MOVAL 62 CI_VLD_IN_IC
R52
CI_CLK_IN_IC
CI_CLK_IN_IC
CC5
GND
厚膜电阻,1/16W,0ohm,±5%,0402,SMD
MDO0 64 CI_TSI_D0
MDO1 65 CI_TSI_D1
MDO2 66 CI_TSI_D2
MDO3 37 CI_TSI_D3
MDO4 38 CI_TSI_D4
MDO5 39 CI_TSI_D5
MDO6 40 CI_TSI_D6
MDO7 41 CI_TSI_D7
GND 69
GND 70
CI卡座,CI jack,H=8mm,PC-CL1D-PV-A02-C-03,CPI
GND
GND
5V_M
RU16
5V_CI
CC1
CC3
片式陶瓷电容,MC,6.3V,10uF,±20%,X5R,0603,SMD,TP
NC/NC/片式陶瓷电容,MC,16V,0.1uF,±20%,X5R,0402,SMD,TP
厚膜电阻,1/16W,0ohm,±5%,0402,SMD
GND
3V3_M
RC1
RC2
厚膜电阻,1/16W,10kohm,±5%,0402,SMD
厚膜电阻,1/16W,10kohm,±5%,0402,SMD
CI_CD1_IN
CI_CD2_IN
NC/NC/片式陶瓷电容,MC,50V,22pF,±5%,NPO,0402,SMD,TP
5V_M
S
QM3
5V_CI
D
5V_CI
TEST
NC/厚膜电阻,1/16W,4.7kohm,±5%,0402,SMD
NC/NC/厚膜电阻,1/16W,10kohm,±5%,0402,SMD
CM18
CM2
G
GND
RM6
QM5
CI_PWR_EN
RM7
NC/厚膜电阻,1/16W,22kohm,±1%,0402,SMD
NC/片式陶瓷电容,MC,6.3V,1uF,±20%,X5R,0402,SMD,TP
NC/厚膜电阻,1/16W,22kohm,±1%,0402,SMD
NC/NC/片式陶瓷电容,MC,16V,0.1uF,±20%,X5R,0402,SMD,TP
NC/NC/片式陶瓷电容,MC,50V,22pF,±5%,NPO,0402,SMD,TP
RM12
GND
GND
NC/低压小功率三极管,NPN,0.2A,40V,30~300,SOT-23,SMD,TP,LMBT3904LT1G,LRC
NC/场效应管,PMOS,-4.2A,-30V,0.052ohm@ID=-4.2A@VGS=-10V,SOT-23-3,AO3401,BLUE ROCKET
5V_CI
PRC1
1 2 CI_IREQ_IO_IC
3 4 CI_WAIT_IO_IC
5 6 PCM_IOSI16
7 8 CI_RESET_OUT_IC
PRC2
1 2 CI_CE2_IO_IC
3 4 CI_IOWR_IO_IC
5 6 CI_IORD_IO_IC
7 8 CI_OE_IO_IC
RC3 CI_WE_IO_IC
RC4 CI_REG_IO_IC
RC5 CI_CE_IO_IC
排阻,RES ARRAY,1/16W,4×10Kohm,±5%,0402,SMD
排阻,RES ARRAY,1/16W,4×10Kohm,±5%,0402,SMD
厚膜电阻,1/16W,10kohm,±5%,0402,SMD
厚膜电阻,1/16W,10kohm,±5%,0402,SMD
厚膜电阻,1/16W,10kohm,±5%,0402,SMD
PCB短路
CI_TSO_D0_IC RC6 CI_TSO_D0 NC/NC/0ohm-0402-PCB
CI_TSO_D1_IC RC7 CI_TSO_D1 NC/NC/0ohm-0402-PCB
CI_TSO_D2_IC RC8 CI_TSO_D2 NC/NC/0ohm-0402-PCB
CI_TSO_D3_IC RC9 CI_TSO_D3 NC/NC/0ohm-0402-PCB
CI_TSO_D4_IC RC10 CI_TSO_D4 NC/NC/0ohm-0402-PCB
CI_TSO_D5_IC RC11 CI_TSO_D5 NC/NC/0ohm-0402-PCB
CI_TSO_D6_IC RC12 CI_TSO_D6 NC/NC/0ohm-0402-PCB
CI_TSO_D7_IC RC13 CI_TSO_D7 NC/NC/0ohm-0402-PCB
CI_TSI_D0_IC RC14 CI_TSI_D0 NC/NC/0ohm-0402-PCB
CI_TSI_D1_IC RC15 CI_TSI_D1 NC/NC/0ohm-0402-PCB
CI_TSI_D2_IC RC16 CI_TSI_D2 NC/NC/0ohm-0402-PCB
CI_TSI_D3_IC RC17 CI_TSI_D3 NC/NC/0ohm-0402-PCB
CI_TSI_D4_IC RC18 CI_TSI_D4 NC/NC/0ohm-0402-PCB
CI_TSI_D5_IC RC19 CI_TSI_D5 NC/NC/0ohm-0402-PCB
CI_TSI_D6_IC RC20 CI_TSI_D6 NC/NC/0ohm-0402-PCB
CI_TSI_D7_IC RC21 CI_TSI_D7 NC/NC/0ohm-0402-PCB
PCB短路
CI_A14_IO_IC RC22 CI_A14_IO NC/NC/0ohm-0402-PCB
CI_A13_IO_IC RC23 CI_A13_IO NC/NC/0ohm-0402-PCB
CI_A12_IO_IC RC24 CI_A12_IO NC/NC/0ohm-0402-PCB
CI_A11_IO_IC RC25 CI_A11_IO NC/NC/0ohm-0402-PCB
CI_A10_IO_IC RC26 CI_A10_IO NC/NC/0ohm-0402-PCB
CI_A9_IO_IC RC27 CI_A9_IO NC/NC/0ohm-0402-PCB
CI_A8_IO_IC RC28 CI_A8_IO NC/NC/0ohm-0402-PCB
CI_A7_IO_IC RC29 CI_A7_IO NC/NC/0ohm-0402-PCB
CI_A6_IO_IC RC30 CI_A6_IO NC/NC/0ohm-0402-PCB
CI_A5_IO_IC RC31 CI_A5_IO NC/NC/0ohm-0402-PCB
CI_A4_IO_IC RC32 CI_A4_IO NC/NC/0ohm-0402-PCB
CI_A3_IO_IC RC33 CI_A3_IO NC/NC/0ohm-0402-PCB
CI_A2_IO_IC RC34 CI_A2_IO NC/NC/0ohm-0402-PCB
CI_A1_IO_IC RC35 CI_A1_IO NC/NC/0ohm-0402-PCB
CI_A0_IO_IC RC36 CI_A0_IO NC/NC/0ohm-0402-PCB

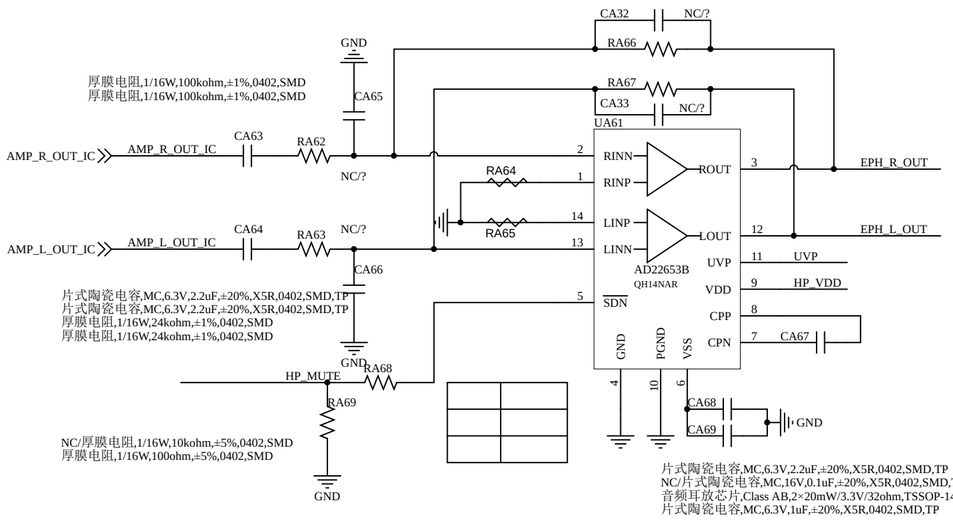

片式陶瓷电容,MC,6.3V,2.2uF,±20%,X5R,0402,SMD,TP
NC/片式陶瓷电容,MC,16V,0.1uF,±20%,X5R,0402,SMD,TP
音频耳放芯片,Class AB,2×20mW/3.3V/32ohm,TSSOP-14,SMD,AD22653B-QH14NAR,ESMT
片式陶瓷电容,MC,6.3V,1uF,±20%,X5R,0402,SMD,TP

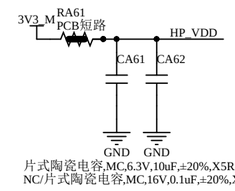

片式陶瓷电容,MC,6.3V,10uF,±20%,X5R,0603,SMD,TP
NC/片式陶瓷电容,MC,16V,0.1uF,±20%,X5R,0402,SMD,TP

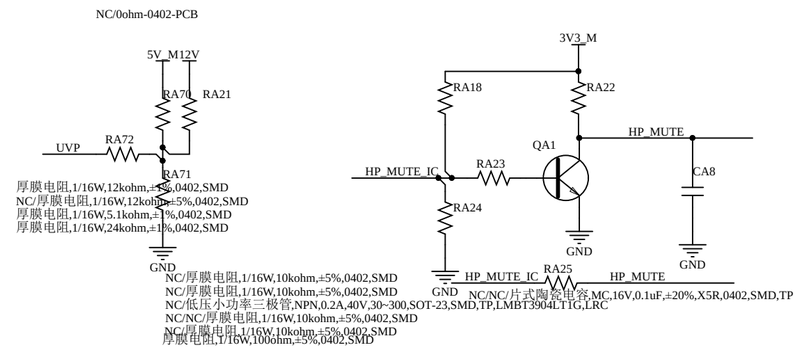

厚膜电阻,1/16W,12kohm,±5%,0402,SMD
NC/厚膜电阻,1/16W,12kohm,±5%,0402,SMD
厚膜电阻,1/16W,5.1kohm,±1%,0402,SMD
厚膜电阻,1/16W,24kohm,±1%,0402,SMD
NC/厚膜电阻,1/16W,10kohm,±5%,0402,SMD
NC/厚膜电阻,1/16W,10kohm,±5%,0402,SMD
NC/低压小功率三极管,NPN,0.2A,40V,30~300,SOT-23,SMD,TP,LMBT3904LT1G,LRC
NC/NC/厚膜电阻,1/16W,10kohm,±5%,0402,SMD
NC/厚膜电阻,1/16W,10kohm,±5%,0402,SMD
厚膜电阻,1/16W,100ohm,±5%,0402,SMD

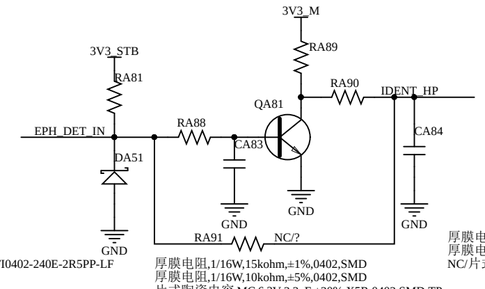

NC/SFI0402-240E-2R5PP-LF
厚膜电阻,1/16W,15kohm,±1%,0402,SMD
厚膜电阻,1/16W,10kohm,±5%,0402,SMD
片式陶瓷电容,MC,6.3V,2.2uF,±20%,X5R,0402,SMD,TP
低压小功率三极管,NPN,0.2A,40V,30~300,SOT-23,SMD,TP,LMBT3904LT1G,LRC

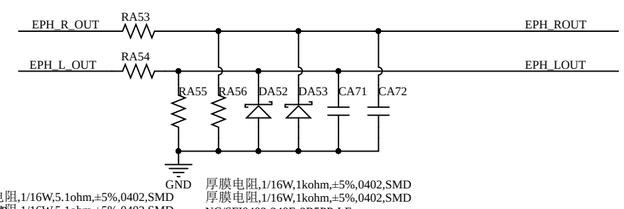

厚膜电阻,1/16W,10kohm,±5%,0402,SMD
厚膜电阻,1/16W,1kohm,±5%,0402,SMD
NC/片式陶瓷电容,MC,16V,0.1uF,±20%,X5R,0402,SMD,TP
厚膜电阻,1/16W,5.1ohm,±5%,0402,SMD
厚膜电阻,1/16W,5.1ohm,±5%,0402,SMD
厚膜电阻,1/16W,1kohm,±5%,0402,SMD
厚膜电阻,1/16W,1kohm,±5%,0402,SMD
NC/SFI0402-240E-2R5PP-LF
NC/SFI0402-240E-2R5PP-LF
NC/片式陶瓷电容,MC,50V,6800pF,±10%,X7R,0402,SMD,TP
NC/片式陶瓷电容,MC,50V,6800pF,±10%,X7R,0402,SMD,TP

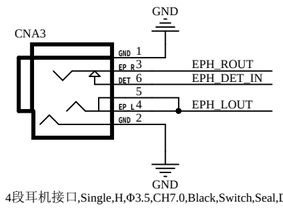

4段耳机接口,Single,H,Φ3.5,CH7.0,Black,Switch,Seal,DIP,PJ-3187-EP,CS

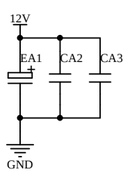

片式陶瓷电容,MC,16V,10uF,±20%,X5R,0805,SMD,TP
NC/片式陶瓷电容,MC,16V,10uF,±20%,X5R,0805,SMD,TP
低压铝电解电容,16V,470uF,±20%,PKRM,P,5.0mm,Φ10×12.5mm,DIP,TR-B,Koshin

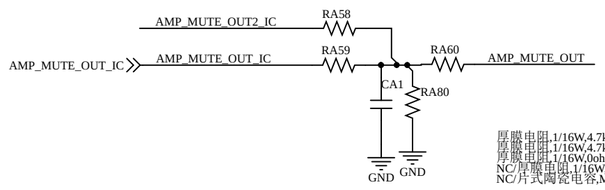

厚膜电阻,1/16W,4.7kohm,±5%,0402,SMD
厚膜电阻,1/16W,4.7kohm,±5%,0402,SMD
厚膜电阻,1/16W,0ohm,±5%,0402,SMD
NC/厚膜电阻,1/16W,0ohm,±5%,0402,SMD
NC/片式陶瓷电容,MC,16V,1uF,±20%,X5R,0402,SMD,TP

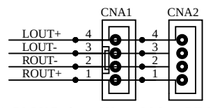

连接插座,1R,4Pin,D2.5,V,Fool-proof,Nature,L2.8mm,DIP,W2411-04SVA-ENSY,XYDT
NC/4PIN-2.54-D-H-G-带扣-B

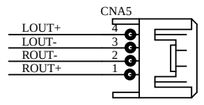

NC/连接插座,1R,4Pin,D2.5,H,SNAP,L-STEP,Fool-proof,Nature,L3mm,DIP,TJC3B-4AW(带定位),AMA

NC/厚膜电阻,1/16W,100kohm,±5%,0402,SMD
NC/厚膜电阻,1/16W,47kohm,±5%,0402,SMD
NC/厚膜电阻,1/16W,47kohm,±5%,0402,SMD
NC/厚膜电阻,1/16W,100kohm,±5%,0402,SMD

片式陶瓷电容,MC,16V,1uF,±20%,X5R,0402,SMD,TP
厚膜电阻,1/16W,1kohm,±5%,0402,SMD
厚膜电阻,1/8W,10ohm,±5%,0805,SMD

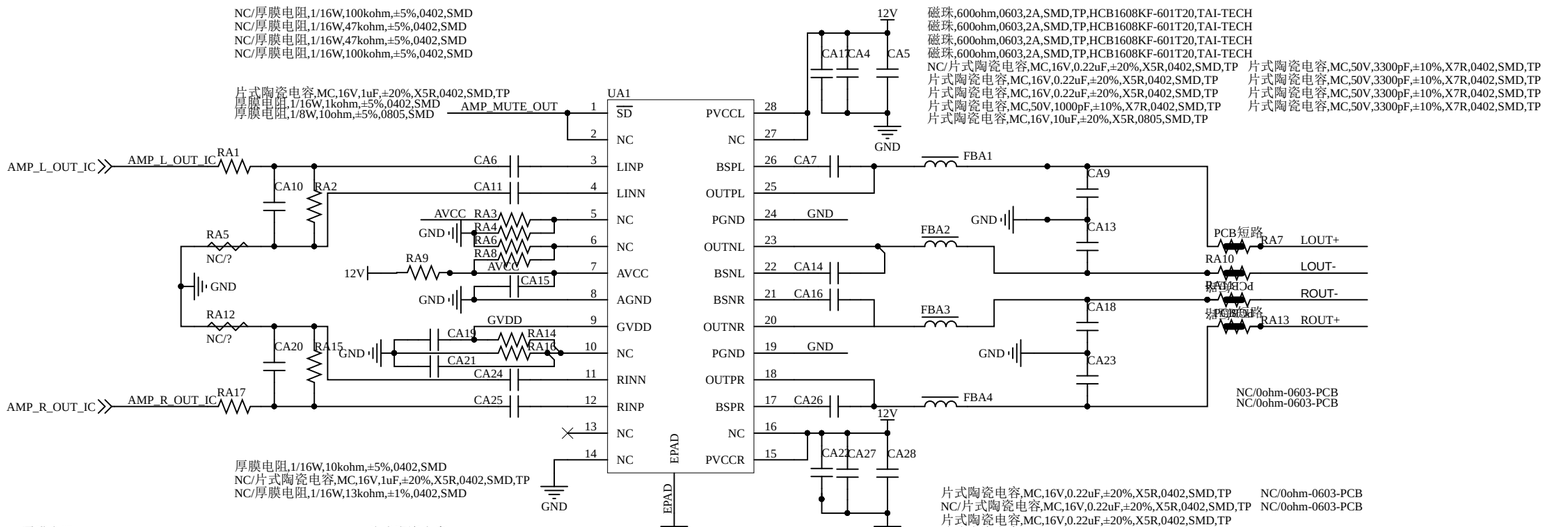

磁珠,600ohm,0603,2A,SMD,TP,HCB1608KF-601T20,TAI-TECH
磁珠,600ohm,0603,2A,SMD,TP,HCB1608KF-601T20,TAI-TECH
磁珠,600ohm,0603,2A,SMD,TP,HCB1608KF-601T20,TAI-TECH
磁珠,600ohm,0603,2A,SMD,TP,HCB1608KF-601T20,TAI-TECH
NC/片式陶瓷电容,MC,16V,0.22uF,±20%,X5R,0402,SMD,TP
片式陶瓷电容,MC,16V,0.22uF,±20%,X5R,0402,SMD,TP
片式陶瓷电容,MC,16V,0.22uF,±20%,X5R,0402,SMD,TP
片式陶瓷电容,MC,50V,1000pF,±10%,X7R,0402,SMD,TP
片式陶瓷电容,MC,16V,10uF,±20%,X5R,0805,SMD,TP
片式陶瓷电容,MC,50V,3300pF,±10%,X7R,0402,SMD,TP
片式陶瓷电容,MC,50V,3300pF,±10%,X7R,0402,SMD,TP
片式陶瓷电容,MC,50V,3300pF,±10%,X7R,0402,SMD,TP
片式陶瓷电容,MC,50V,3300pF,±10%,X7R,0402,SMD,TP

厚膜电阻,1/16W,10kohm,±5%,0402,SMD
NC/片式陶瓷电容,MC,16V,1uF,±20%,X5R,0402,SMD,TP
NC/厚膜电阻,1/16W,13kohm,±1%,0402,SMD

片式陶瓷电容,MC,16V,0.22uF,±20%,X5R,0402,SMD,TP　NC/0ohm-0603-PCB
NC/片式陶瓷电容,MC,16V,0.22uF,±20%,X5R,0402,SMD,TP　NC/0ohm-0603-PCB
片式陶瓷电容,MC,16V,0.22uF,±20%,X5R,0402,SMD,TP
片式陶瓷电容,MC,50V,1000pF,±10%,X7R,0402,SMD,TP
音频功放芯片,Class D,2×10W/12V/8ohm,TSSOP-28,SMD,AD52050C-26QG28NRR,ESMT
片式陶瓷电容,MC,16V,10uF,±20%,X5R,0805,SMD,TP

厚膜电阻,1/16W,1kohm,±5%,0402,SMD
NC/厚膜电阻,1/16W,1kohm,±5%,0402,SMD
片式陶瓷电容,MC,50V,3300pF,±10%,X7R,0402,SMD,TP
片式陶瓷电容,MC,16V,0.22uF,±20%,X5R,0402,SMD,TP
片式陶瓷电容,MC,16V,0.22uF,±20%,X5R,0402,SMD,TP

片式陶瓷电容,MC,16V,1uF,±20%,X5R,0402,SMD,TP
NC/厚膜电阻,1/16W,1kohm,±5%,0402,SMD
片式陶瓷电容,MC,50V,3300pF,±10%,X7R,0402,SMD,TP
片式陶瓷电容,MC,16V,0.22uF,±20%,X5R,0402,SMD,TP
片式陶瓷电容,MC,16V,0.22uF,±20%,X5R,0402,SMD,TP

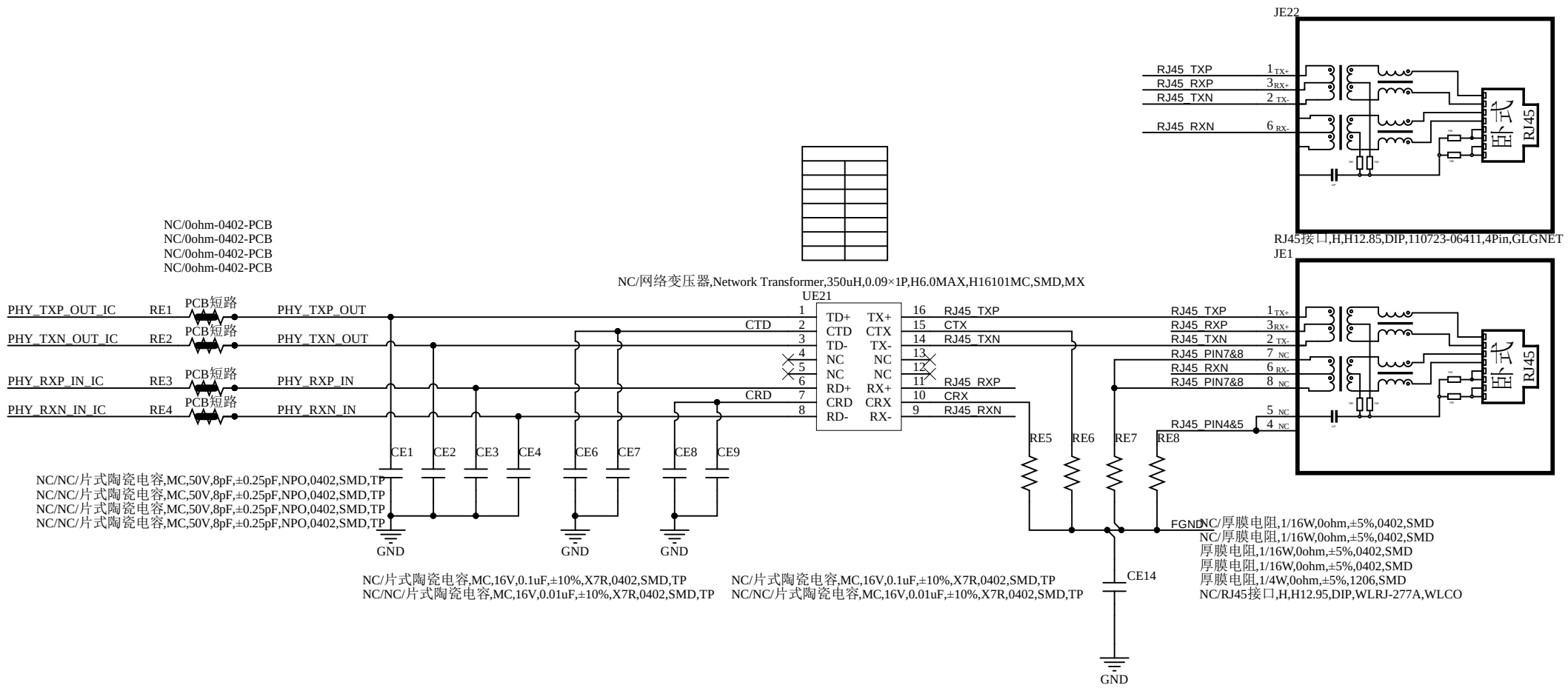
JE22
RJ45_TXP
RJ45_RXP
RJ45_TXN
RJ45_RXN
RJ45接口,H,H12.85,DIP,110723-06411,4Pin,GLGNET
JE1
NC/0ohm-0402-PCB
NC/0ohm-0402-PCB
NC/0ohm-0402-PCB
NC/0ohm-0402-PCB
NC/网络变压器,Network Transformer,350uH,0.09×1P,H6.0MAX,H16101MC,SMD,MX
UE21
PHY_TXP_OUT_IC
PHY_TXN_OUT_IC
PHY_RXP_IN_IC
PHY_RXN_IN_IC
RE1
RE2
RE3
RE4
PCB短路
PHY_TXP_OUT
PHY_TXN_OUT
PHY_RXP_IN
PHY_RXN_IN
CTD
CRD
TD+ TX+
CTD CTX
TD- TX-
NC NC
NC NC
RD+ RX+
CRD CRX
RD- RX-
RJ45_TXP
CTX
RJ45_TXN
RJ45_RXP
CRX
RJ45_RXN
RJ45_PIN7&8
RJ45_PIN4&5
CE1
CE2
CE3
CE4
CE6
CE7
CE8
CE9
RE5
RE6
RE7
RE8
NC/NC/片式陶瓷电容,MC,50V,8pF,±0.25pF,NPO,0402,SMD,TP
NC/NC/片式陶瓷电容,MC,50V,8pF,±0.25pF,NPO,0402,SMD,TP
NC/NC/片式陶瓷电容,MC,50V,8pF,±0.25pF,NPO,0402,SMD,TP
NC/NC/片式陶瓷电容,MC,50V,8pF,±0.25pF,NPO,0402,SMD,TP
GND
FGND
NC/厚膜电阻,1/16W,0ohm,±5%,0402,SMD
NC/厚膜电阻,1/16W,0ohm,±5%,0402,SMD
厚膜电阻,1/16W,0ohm,±5%,0402,SMD
厚膜电阻,1/16W,0ohm,±5%,0402,SMD
厚膜电阻,1/4W,0ohm,±5%,1206,SMD
NC/RJ45接口,H,H12.95,DIP,WLRJ-277A,WLCO
NC/片式陶瓷电容,MC,16V,0.1uF,±10%,X7R,0402,SMD,TP
NC/NC/片式陶瓷电容,MC,16V,0.01uF,±10%,X7R,0402,SMD,TP
NC/片式陶瓷电容,MC,16V,0.1uF,±10%,X7R,0402,SMD,TP
NC/NC/片式陶瓷电容,MC,16V,0.01uF,±10%,X7R,0402,SMD,TP
CE14
GND
DE1
PHY_TXP_OUT
PHY_TXN_OUT
GND
PHY_RXP_IN
PHY_RXN_IN
IN1 OUT1
IN2 OUT2
G1 G2
IN3 OUT3
IN4 OUT4
NC/小信号类TVS管,M,30W,0.5pF,5V,DFN2510-10L,SMD,TP,AZ1045-04F.R7G,Amazing
CE10
CE11
LC1
LAM1
片式陶瓷电容,MC,16V,0.1uF,±20%,X5R,0402,SMD,TP
片式陶瓷电容,MC,16V,0.1uF,±20%,X5R,0402,SMD,TP
信号共模电感,800ohm,2×1.2×1.2mm,SMD,WCM2012F2SF-801-N,Tai-tech
信号共模电感,8kohm,3.4×1.6×2mm,SMD,DCM321620F2SF-600T02,TAI-TECH
CE12
CE13
LC2
LAM2
片式陶瓷电容,MC,16V,0.1uF,±20%,X5R,0402,SMD,TP
片式陶瓷电容,MC,16V,0.1uF,±20%,X5R,0402,SMD,TP
信号共模电感,800ohm,2×1.2×1.2mm,SMD,WCM2012F2SF-801-N,Tai-tech
信号共模电感,8kohm,3.4×1.6×2mm,SMD,DCM321620F2SF-600T02,TAI-TECH

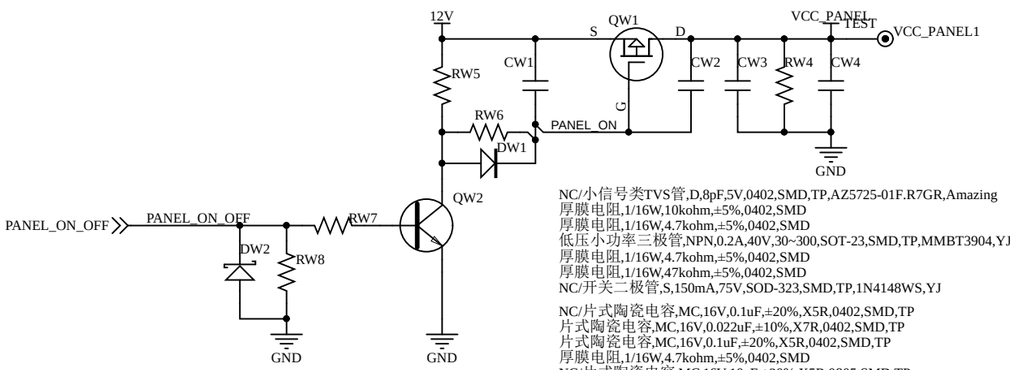

NC/小信号类TVS管,D,8pF,5V,0402,SMD,TP,AZ5725-01F.R7GR,Amazing
厚膜电阻,1/16W,10kohm,±5%,0402,SMD
厚膜电阻,1/16W,4.7kohm,±5%,0402,SMD
低压小功率三极管,NPN,0.2A,40V,30~300,SOT-23,SMD,TP,MMBT3904,YJ
厚膜电阻,1/16W,4.7kohm,±5%,0402,SMD
厚膜电阻,1/16W,47kohm,±5%,0402,SMD
NC/开关二极管,S,150mA,75V,SOD-323,SMD,TP,1N4148WS,YJ

NC/片式陶瓷电容,MC,16V,0.1uF,±20%,X5R,0402,SMD,TP
片式陶瓷电容,MC,16V,0.022uF,±10%,X7R,0402,SMD,TP
片式陶瓷电容,MC,16V,0.1uF,±20%,X5R,0402,SMD,TP
厚膜电阻,1/16W,4.7kohm,±5%,0402,SMD
NC/片式陶瓷电容,MC,16V,10uF,±20%,X5R,0805,SMD,TP
低压功率MOS管,PMOS,-4.1A,-30V,±20V,44mohm,SOT-23-3L,SMD,JMTJ3407A,JJM

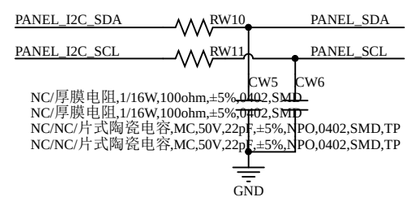

NC/厚膜电阻,1/16W,100ohm,±5%,0402,SMD
NC/厚膜电阻,1/16W,100ohm,±5%,0402,SMD
NC/NC/片式陶瓷电容,MC,50V,22pF,±5%,NPO,0402,SMD,TP
NC/NC/片式陶瓷电容,MC,50V,22pF,±5%,NPO,0402,SMD,TP

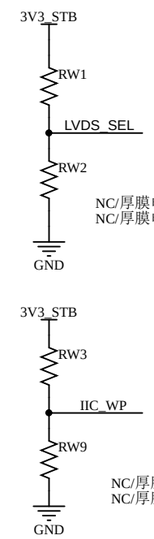

NC/厚膜电阻,1/16W,4.7kohm,±5%,0402,SMD
NC/厚膜电阻,1/16W,100ohm,±5%,0402,SMD

NC/厚膜电阻,1/16W,4.7kohm,±5%,0402,SMD
NC/厚膜电阻,1/16W,10kohm,±5%,0402,SMD

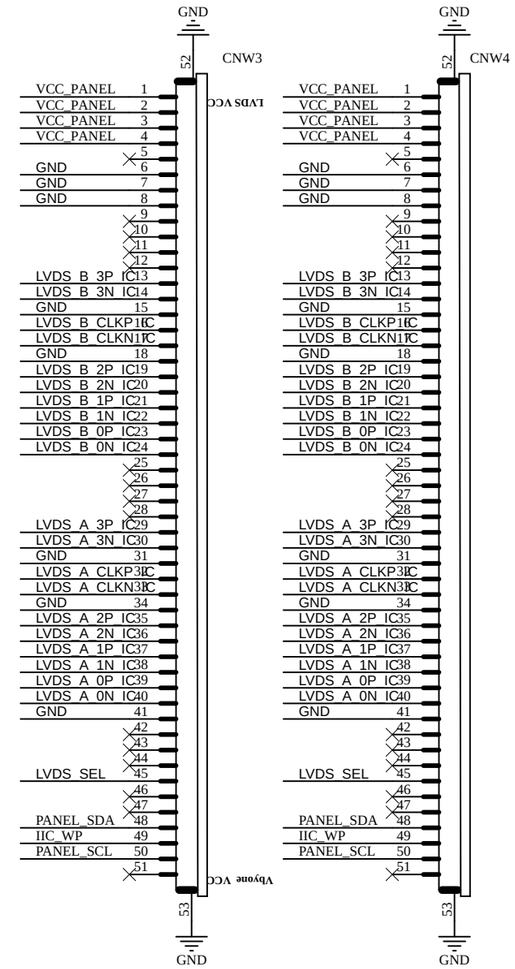

NC/FPC/FFC插座,1R,51Pin,D0.5,H,H2.2,Bottom,Front,SMD,0.5-20-51PBX-P,XFE
FPC/FFC插座,1R,51Pin,D0.5,H,H3.1,Top,Back,SMD,W05039FA051M8WL,CT

Title		
Size A3	Number -	Revision -
Date: 2023/5/6		Sheet of
File: D:\项目\..\TV#14_LVDS.SchDoc		Drawn By: